EDITION ONE

RASPREP

Module 4

Patent & Design Drafting

PREFACE

This book titled "Patent and Design Drafting" provides a comprehensive knowledge about the patent specification and design application drafting in a clear and practical way. Drafting a patent eloquently, portraying the inventive concepts with precision is a critical skill as the patent is a techno-legal document and drafting of it should support innovation, legal protection, and commercial viability. The book will assist students, researchers, innovators and professionals engaged in technical, legal and design discipline with the tools needed to navigate the drafting process for both patent and designs, with clarity, precision, and purpose.

The book is divided into two parts. The first part of the book is about drafting a patent specification and the second part of the book is about drafting a design application. Both patent specification and design application drafting are discussed here, specifically in the context of Indian intellectual property law.

Each part is explained in detail, and also supported by the illustrative examples for better understanding of the readers. Simple exercises for both patent specification drafting and design application drafting are included here in this module to help someone apply what he/she learn.

By providing conceptual understanding about both the patent specification and design application drafting, illustrative examples, and relevant exercises this module in intended to equip the readers not only the basic understanding of both kinds of drafting but also the necessary applied skills for preparing high-quality patent specification and design application with a focus on Indian applications.

TABLE OF CONTENTS

1	**About the Company**	4
2	**Chapter 1: Patent Drafting**	7
3	**Chapter 2: Information on how to Draft a Patent Specification**	9
4	**Chapter 3: Examples of Complete Specification**	14
5	**Chapter 4: Drafting a Design Application**	44
6	**Chapter 5: Examples of Representation Sheets**	47
7	**Chapter 6: Test Your Knowledge**	61
8	**References**	66

RAS INTELLECT
Your Trusted Partner in Intellectual Property

RAS Intellect Pvt Ltd

MOHALI | NOIDA | AMBALA

Info@rasintellect.com

510-513, 5th floor, Jubilee Walk, Sector 70, Mohali, 160071

+ 91 7009846630 | +91 6280302834

www.rasintellect.com

About Us

At RAS Intellect, we specialize in patents, trademarks, copyrights, and everything that protects your brainchild. From solo inventors to growing startups and global enterprises, we empower creators to secure, protect, and profit from their innovation. Our team of skilled professionals is dedicated to guiding organizations through the complexities of IP processes, ensuring that valuable assets are effectively protected and leveraged for maximum benefit. We operate across multiple verticals to cater to the unique challenges faced by organizations in promoting innovation while ensuring effective protection and management of intellectual assets. We also offer end-to-end support for research paper writing and publication, enabling impactful dissemination of innovative ideas in reputed journals.

Vision

Our vision is to become a leading innovation and intellectual property enabler across India by empowering startups, universities, researchers, and enterprises with technology-driven IP, research, and commercialization solutions that transform ideas into impactful innovations.

Mission

To empower innovators and creators by protecting and maximizing the value of their intellectual property through strategic, tailored solutions, while advancing research excellence by enabling high-quality publications in globally recognized and reputed journals.

Charting the Course to Success

Our services are focused on strengthening measurable research, innovation, IPR, publication, and documentation outcomes for NIRF, NAAC and IIC.

1. IPR and Patent Filing Support

- Patentability assessment of faculty/student research
- Prior art searching and patent landscape reports
- Provisional and complete patent specification drafting
- Patent filing
- Early publication request support
- Request for examination filing support
- FER response drafting and prosecution assistance
- Patent grant tracking and reporting
- Design registration filing
- Copyright filing for software, manuals, literary works, lab content and academic material
- Trademark support for university innovation cells, incubation centres and institutional brands

2.NIRF Research Parameter Support

- Annual NIRF research data audit
- Patent published/granted tracking
- Research publication tracking
- Scopus publication mapping
- Citation and H-index monitoring
- Faculty-wise research output mapping
- Department-wise research performance reports

3. NAAC Criterion III Support

- Criterion III gap analysis
- Research policy drafting
- IPR policy drafting or revision
- Innovation and startup policy drafting
- Seed money policy documentation
- Research promotion mechanism documentation
- Faculty research incentive policy support
- Patent and publication evidence compilation
- MoU and collaboration evidence structuring
- Extension activity documentation
- Innovation ecosystem documentation

4. IIC and Innovation Cell Support

- IIC annual activity calendar planning
- Innovation and IP awareness sessions
- Patent search workshops
- Idea-to-IP mentoring
- Student innovation screening
- Hackathon planning and execution
- Prototype documentation support
- Startup mentoring sessions
- Entrepreneurship and commercialization workshops.

5. Research Paper and Publication Support

- Research topic selection support
- Literature review guidance
- Research paper structuring
- Journal selection guidance
- Scopus-indexed journal identification
- Plagiarism and AI-similarity reduction guidance
- Manuscript formatting as per journal guidelines
- Citation and referencing support
- Response to reviewer comments

6. Faculty Development and Student Training Programs

- Patent drafting workshop
- Patent search workshop
- Research methodology workshop
- Scopus publication workshop
- Copyright and design registration workshop
- Innovation-to-commercialization workshop
- Technology transfer and licensing session
- Startup and entrepreneurship bootcamp
- Patent Agent career awareness session
- IP for faculty research advancement
- IP for Ph.D. scholars and research supervisors

7. University IP Cell Setup and Management

- IP Cell formation support
- IP Cell SOP drafting
- Invention disclosure form preparation
- Patent review committee formation support
- IP ownership and revenue-sharing policy
- Faculty/student disclosure workflow
- Patent filing calendar
- IP awareness schedule
- Department-wise IP coordinators' training

8. Incubation and Commercialization Support

- Technology readiness assessment
- Commercial potential assessment
- Startup idea screening
- IP-based startup mentoring
- Licensing strategy
- Technology transfer documentation
- MoU drafting support
- Pitch deck preparation
- Innovation portfolio preparation

RASPREP University Training Programs

RAS Intellect offers structured IP training and internship programs for universities through 1-week, 6-week, and 6-month formats. These programs cover IP fundamentals, patent searching, patent drafting, legal understanding, innovation awareness, and career readiness in the intellectual property domain. The modules can be delivered in virtual, hybrid, or offline mode and may also be customized as credit-based, vocational, or skill-development programs for students and faculty. This initiative supports universities in strengthening innovation culture, student employability, academic enrichment, and evidence-based contribution towards NAAC, NIRF and IIC-related research and innovation parameters.

How this supports Universities

- NAAC Criterion III: research, innovation, extension, skill development, and institutional innovation ecosystem.
- IIC activities: IP awareness, innovation training, patent search workshops, idea-to-IP mentoring, and entrepreneurship-linked activities.
- NIRF support areas: research culture, professional practice, IPR awareness, patent filing pipeline, and student/faculty innovation outcomes.
- Employability and academic enrichment: by creating technically trained students for IP, patent drafting, research analysis, and innovation-based career roles.

Recent Milestones

Recognitions and Contributions from 2024–2025

- **National IP Outreach Mission – Viksit Bharat**

Dr. Ruchi represented RAS Intellect Solutions as a panelist in the "IPR for Women in Business" session organized by PHDCCI, contributing to the national dialogue on IP for inclusive innovation.

- **National IP Yatra 2025 – ASSOCHAM & MSME Ministry**

As co-panelist at this MSME Ministry-supported event, Dr. Ruchi addressed "Maximizing IP Value for Startups & MSMEs," underscoring the firm's expertise in IP commercialization.

- **National Intellectual Property Awards 2024 – Ministry of Commerce & CGPDTM**

Dr. Ruchi was invited to the prestigious IP Awards held at Bharat Mandapam, New Delhi, recognizing RAS Intellect's national contribution to IP literacy and strategy.

- **Leadership & Innovation Milestone – TiECON 2025**

Honoured by the Governor of Punjab, Dr. Ruchi received an award at TiECON 2025 for excellence in research and innovation leadership.

Building IP Foundations for Viksit Bharat

A visionary collaboration with Punjab School Education Board (PSEB)

In alignment with the national vision of **Viksit Bharat@2047**, RAS Intellect is collaborating with the **Punjab School Education Board (PSEB)** to introduce Intellectual Property (IP) education in schools across Punjab.

This initiative aims to embed IP awareness and foundational knowledge within the school curriculum — empowering students and educators to understand, create, and protect innovation from an early age. By nurturing IP consciousness at the grassroots level, we are shaping a generation of future-ready innovators equipped to lead India toward self-reliance and global competitiveness.

Meet the Founder

Visionary leadership driving India's IP revolution

Dr. Ruchi Singla

Director & CEO, RAS Intellect Solutions Pvt. Ltd

- Over 20 years of experience in academic research, intellectual property strategy, and innovation leadership
- Recognized among the **Top 50 Mentors in India** for contributions to national mentoring initiatives
- Serves as a **Regional Mentor of Change** under the **Atal Innovation Mission**, NITI Aayog
- Successfully guided **over 2,300 patent filings** across diverse fields, including AI, drones, and cybersecurity
- Established **three Centres of Excellence** during her academic leadership, fostering innovation ecosystems
- Licensed Indian Patent Agent (No. 5887) and Certified Canadian Patent Administrator by **the Intellectual Property Institute of Canada**
- Secured **over ₹15 crores** in funding for research, innovation, and startup incubation projects
- Empaneled as an **IP Facilitator under the Startup India Scheme (SIIP)** to support early-stage ventures
- Regular speaker and co-panelist at national forums including **TiECON, ASSOCHAM, and PHDCCI**
- Former **Director of Research & Innovation at CGC Landran** and **Director at ACIC RISE Association,** supported by NITI Aayog

At the intersection of policy, education, and intellectual property, Dr. Ruchi Singla is building a more innovation-ready India.

Chapter 1
PATENT DRAFTING

Module 4 is all about **drafting. Drafting** in context of both patents and designs is addressed here in this module.

Drafting a Patent specification is an unavoidable, critical and very important part of a patent application submission. A patent specification written by a skilled professional ensures the grant of the patent and assured winning in case of any litigation thereof. As a patent is a techno-legal document, drafting it, needs a special skill. Therefore, writing a patent specification needs a specialized training. Here in module 4, the details about the patent specification are given in a simplified way so that anyone can understand it and master the drafting skill easily.

This module also includes the structured process of preparing and submitting a design application, which protects the ornamental appearance of an article rather than its function.

Objectives

1. To share insights about the contents of a patent specification and a design application. The module gives a thorough understanding about the format of both the patent specification and the design application.
2. To instruct about the things which needs to be taken into account while drafting a patent specification and a design application. This module not only provides a thorough understanding of the patent specification format but also teaches by providing both instruction and proper examples how to draft the claim section, which is the most important part of the patent specification, abstract, claim and the rest of the patent specification. The module further provides a complete understanding by providing both instruction and proper examples, about a design application, highlighting what needs to be prepared for a complete, skilled and well-organized design application.
3. To provide required knowledge to analyze a patent specification and a design application using both instruction and examples.
4. To highlight in a patent specification about the fact that it meets the requirements for patentability. During drafting a patent specification care should be taken in drafting the prior arts as well as the problem which has not been solved by the prior art but needs to be solved. The patent specification should also mention the solution to the noticed problem in such a way that it clearly, fully and particularly satisfies all the patentability conditions. Here in this module both the structured instruction and the examples makes a person master in drafting patent specification in such a way that it highlights its compliance with the patentability criteria.

Outcomes:

The readers of this module will gain a comprehensive knowledge about the principles, techniques and legal frameworks involved in drafting an effective patent specification and a design application by equipping them with the following abilities:

- Drafting clear and enforceable claims to protect the core inventive concept.
- Highlighting the compliance of the invention with the patentability criteria in the patent specification properly.
- Preparing a detailed patent specification and drawings, meeting a given standard.
- Avoiding common pitfalls, leading to rejection of patent application or it's weak protection.
- Structuring the patent specification strategically to maximize its scope and to minimize any potential risk on it.
- Drafting a clear and enforceable design application, highlighting its compliance with the registration criteria, meeting a given standard.

RAS INTELLECT
Your Trusted Partner in Intellectual Property

Chapter 2

INFORMATION ON HOW TO DRAFT A PATENT SPECIFICATION

A patent specification, provisional or complete, is a part of Form 2. The contents of a provisional or complete specification are as follows:

- Title
- Applicant details with name, nationality and address
- Preamble of the description
- Technical field
- Background
- Objectives
- Summary
- Drawings
- Brief description of drawings
- Detailed description
- Claim
- Abstract

There are different sections of The Patents Act 1970 and rules of The Patents Rules 2003, which specifies requirements regarding contents of the patent specification to make the patent specification clear, compliant with the given standard and the patentability criteria, and strategically structured. Those relevant sections and rules are given below.

- Relevant Sections: Section 7, Section 9 and Section 10.
- Relevant Rules: Rule 9, Rule 13, Rule 14, Rule 15 and Rule 16.

The details about the different contents of a patent specification, complying with both the relevant sections and the relevant rules discussed above, to make the invention identifiable and understandable through the patent specification are as follows.:

TITLE:

- It should be provided in the first page of the Form – 2.
- It should be informative and meaningful.
- It should sufficiently disclose the subject-matter of the invention.
- It has to clearly indicate the nature of the invention.
- It should not describe the invention.
- It should not exceed 15 words.
- Inventor's name, the word "Patent", any word in other languages should not be included in a title.
- It should be aligned with the claim.
- It should embrace different variant of the claims such as - method, apparatus system.
- It should be unambiguous and free from any fancy expression and/or words.

APPLICANT DETAILS WITH NAME, NATIONALITY AND ADDRESS:

- It should be provided in the first page of the Form – 2.

PREAMBLE OF THE DESCRIPTION:

- It should be provided in the first page of the Form – 2.
- For Provisional Specification, the preamble of the description should be "The following specification describes the invention".
- For complete Specification, the preamble of the description should be "The following complete specification particularly describes the disclosure and the manner in which it is performed".

TECHNICAL FIELD:

- It should be provided in the second page of the Form – 2.
- It should have the information about the areas of application.
- It should have a bit of information of what the invention is about.
- It should also have the information about the general or broad area or the areas to which the invention falls.

BACKGROUND:

- It should not describe the claim of the invention.
- It describes the prior art to distinguish the existing problem in that area of research which is not solved by the existed art, helpful to establish the inventiveness of the invention.
- It may use drawings to explain any prior art.
- The prior arts in the background section may be either patent or non-patent literature or both.
- It should not exaggerate or negatively criticize the disadvantages of the prior art.

OBJECTIVES:

- It should point out the advantages of the invention, highlighting the comparative analysis of the invention over the existing one.
- This part may start with a general objective, then a primary objective and then other objectives highlighting the use, methods, improvements, advantages, etc. of the invention should be mentioned.
- It should disclose all the applications of the invention presenting broad objectives of the invention.
- It should act as a guide for drafting the detailed description section.

SUMMARY:

- It should specify the solution to the problems described in the background section.
- It should describe the solution to the problem or problems described in the last paragraph of the background section.
- It should highlight the achievements of objects.
- It must have subject matter of the principle claim, giving a broad overview.

DRAWINGS:

- Drawings may be supplied and are deemed part of the specification if required.
- It must be clear, precise, and referenced in the specification.
- It is mandatory if required to understand the invention otherwise not.
- It must not appear within the text of the specification.
- It should be submitted on separate sheets.

- If the drawing section of an invention has more than one figure, then each figure should be given in a fresh page, where each of the page should contain the information about (i) applicant's name in the top left corner, (ii) date in the bottom left corner, (iii) total number of pages and the consequential page number in top right corner, and (iv) the name and the signature of the applicant or the agent along with his/her patent agent number.
- It should be sequentially numbered.
- Dimensions must not be marked in the drawings.
- It should have consistent Labelling.
- It must be clear.
- It must not have any descriptive matter unless they contain flow diagrams.
- Drawing section is not a mandatory part of a provisional patent specification but for a complete patent specification.
- Drawings must follow specific formatting standards set by patent offices to ensure clarity and uniformity.
- Drawings should clarify the invention's structure and operation, supporting claims and descriptions effectively.

BRIEF DESCRIPTION OF DRAWINGS:

- It provides just a brief overall description of drawings.
- This section provides a series of separate paragraphs, each of them briefly explaining or describing a respective figure of the attached drawings.
- Here no reference numerals or the specific part or parts should be added.

DETAILED DESCRIPTION:

- This section should be organized and clearly described, so that a person skilled in the art can understand it and can reproduce it without the help of the inventors of the invention.
- The specification should have a fully and particularly described detailed description part including its operation or use and the method of performance.
- It should disclose the best method of working of the invention known to the inventors at the time of filing.
- Sufficient details about the invention should be there.
- Reference to the drawings should be specific in this section mentioning the corresponding reference numerals.
- The terminology should be consistent throughout this section.
- This section should start with a general overview and proceed with increasing level of details.
- It should carry the explanation of the invention along with the reference to the drawings.

CLAIM:

- The claims should start in a different page.
- It should be preceded with a preamble I/We Claim.
- The claims, the essence of a patent, defines the scope of protection.
- Claims must relate to a single invention or inventive concept.
- It should be clear and succinct.
- At the end of the claim section, the information about the date and the name and the signature of the applicant or the agent along with his/her patent agent number should be there.
- A claim is composed of an introductory phrase, a linking word (e.g., "comprising") and the body of the claim.
- The first claim of any types of claims (device/system/method claim) should be the broadest claim being the independent claim and the claims become narrower down the lane for that specific type of claims (device/system/method claim).
- Claim section is not a mandatory part of a provisional patent specification but for a complete patent specification.
- The claims must be based on the disclosed matter in the detailed description part.
- Every claim should be a single sentence, and has a priority date associated with it.
- What is not written in the claim section is "Not Claimed"
- There are three types of Claims:
  a. Apparatus/Device Claim
  b. System Claim
  c. Method Claim
- Every Type of Claim can again be classified into the following type of claims
  - Independent Claim
  - Dependent Claim

ABSTRACT:

- It should be written in a separate sheet.
- It should not exceed 150 words.
- It should start with the title of the invention.
- An abstract contains the technical information about the invention carrying the same numerals to denote the corresponding elements of the device/method/system, described in drawings as well as in the detailed description.
- It should indicate the figure which will be published with it.
- At the end of the abstract section, the information about the date and the name and the signature of the applicant or the agent along with his/her patent agent number should be there.

ADDITIONAL INFORMATION:

- For an invention involving a biological material, the material must be deposited in an international depository authority under the Budapest Treaty, and must have the information about the reference to the deposit, characteristics of the material, depository details including its name, address, date of deposition and the reference number, and source and geographical origin of the material.
- Every patent specification should be made on A4 sized paper where 4 cm margin should be there on the top and left-hand part and 3 cm margin should be there on the bottom and right-hand part.
- Every specification (provisional or complete) must be in Form 2.
- A divisional application must reference the original application.
- A patent of addition must reference the main patent and state that it is an improvement/modification.

- Models or samples, properly labeled and described, may be required to illustrate the invention, but it is not considered a mandatory part of the specification.
- Form 2 is applicable for both a provisional and a complete specification. The difference between these two specifications is, (i) the preamble for the provisional specification will be different than that of the complete specification, and (ii) the claim is not a mandatory part of a provisional specification but it is mandatory for a complete specification.
- In the provisional specification title and description is sufficient unlike complete specification. For both type of specification, drawings can also be added as a part.
- The complete specification should show clearly the prior art, the unsolved problem which needs to be addressed, how the present invention is solving the problem, highlighting not only its novelty but also the inventiveness and industrial applicability of the present invention clearly.

RAS INTELLECT
Your Trusted Partner in Intellectual Property

Chapter 3
EXAMPLES OF COMPLETE SPECIFICATION

Some Examples of complete specifications published by the Indian Patent Office (IPO), are given below for clear and better understanding of a complete patent specification.

EXAMPLE 1

FORM 2
THE PATENTS ACT 1970 (39 of 1970)
&
The Patent Rules 2003

COMPLETE SPECIFICATION
(See sections 10 & rule 13)

TITLE OF THE INVENTION

DEVICE TO FACILITATE HEALTH MONITORING AND WIPING OF A FLUID

APPLICANT (S)
NAME : ABC
NATIONALITY : Indian
ADDRESS : House No. – 123,
P.O. – EFG,
District – HIJ,
State – KLM,
Pin – 712345, India.

PREAMBLE TO THE DESCRIPTION

COMPLETE SPECIFICATION

The following specification particularly describes the invention and the manner in which it is to be performed.

TECHNICAL FIELD
The present disclosure relates generally to field of health and care. More particularly, the present disclosure provides a device to facilitate health monitoring and wiping of a fluid, where the device is associated with an entity.

BACKGROUND
Background description includes information that may be useful in understanding the present invention. It is not an admission that any of the information provided herein is prior art or relevant to the presently claimed invention, or that any publication specifically or implicitly referenced is prior art.

Spectacles or sunglasses causes a major problem during rainy season for person wearing the spectacles or the sunglasses. At time of the rainy season, water droplets falling on the specs required to be cleaned and removed. Every time removing the specs and cleaning the specs manually is an irritating task as well as risky also while driving. Stress can cause several problems such as diabetes, heart attacks, etc. Similar problem can be encountered by a person while driving. There should be a solution that can monitor symptoms of the upcoming heart attack and alerts a person to takes necessary measures to avoid or control such problems while driving and can contact nearby doctors as soon as possible. Also, the solution can serve multiple purpose by cleaning the spectacles along with monitoring health of the person.

Existing solutions can include cleaning spectacles or glasses by simple cloth. However, removing the glass frequently and cleaning is an irritating task. Cleaning the glass with help of the spectacles cleaning liquid requires carrying the specs cleaning liquid, which is inconvenient.

Also, there are solutions to monitor health of the person, however such solutions have certain limitations and do not solve the purpose of cleaning along with the health monitoring of the person wearing spectacles or glasses. All other possible solutions need the spectacles to be removed and then cleaning the spectacles manually which is quite risky as the spectacles can slip out from hands of the person wearing the spectacles. Moreover, during the driving and walking time, it is not possible to remove the spectacles frequently and clean the spectacles.

There is a need to overcome above mentioned problems of prior art by bringing a solution that serve multiple purpose of cleaning spectacles and monitoring health of person wearing the spectacles simultaneously. Also, the solution can give symptoms of heart attack in advance. The solution is cost effective and is convenient to use and easy to wear and remove.

OBJECTIVES

Some of the objects of the present disclosure, which at least one embodiment herein satisfies are as listed herein below.

It is an object of the present disclosure to provide a device that facilitates automatic cleaning of spectacles and enables making cleaning process fast and easy for the spectacles.

It is an object of the present disclosure to provide a device that is cost- effective, ready and easy to use.

It is an object of the present disclosure to provide a device that is easy to wear, carry and remove.

It is an object of the present disclosure to provide a device that is long-lasting and do not get damaged easily.

It is an object of the present disclosure to provide a device that is useful in almost all the glasses such as spectacles, sun-glasses, welding glasses and the likes.

It is an object of the present disclosure to provide a device that can be considered as a life-saving device.

It is an object of the present disclosure to provide a device that has two in one functionality. Automatic glass cleaning and alertness regarding heart attacks.

It is an object of the present disclosure to provide a device that helps in monitoring health of a person wearing the device and alerting the person for emergency situation.

SUMMARY

The present disclosure relates generally to field of health and care. More particularly, the present disclosure provides a device to facilitate health monitoring and wiping of a fluid, where the device is associated with an entity.

An aspect of the present disclosure pertains to device to facilitate health monitoring and wiping of a fluid, the device may include one or more sections. The one or more sections may include a first set of sensors configured to sense the fluid on at least one of the one or more sections and correspondingly generate a first set of signals. The one or more sections of the device may include a second set of sensors configured to sense health parameters of an entity associated with the device and correspondingly generate a second set of signals. The one or more sections may include a wiping assembly configured at a predetermined position on each of the one or more sections and a control unit operatively coupled with the first set of sensors, the second set of sensors, and the wiping assembly where the control unit may include one or more processors coupled with a memory, the memory storing instructions executable by the one or more processors. The control unit may be configured to generate a set of actuation signals in response to the received first set of signals, where the set of actuation signals may be transmitted to the wiping assembly, where the wiping assembly may facilitate wiping the fluid from at least one of the one or more sections in response to the set of actuation signals. The control unit may be configured to extract a third set of signals from the second set of signals, where the third set of signals may pertain to pulse rate associated with the entity. The control unit may be configured to compare the pulse rate with a first dataset, where the first dataset may include predetermined pulse rate limit. The control unit may be configured to generate a set of alert signals when at least one of the compared pulse rate is beyond the predetermined pulse rate limit. The control unit may be configured to generate a set of warning signals, when at least one of the compared pulse rate is within the predetermined pulse rate limit.

In an aspect, the wiping assembly may include a spring coupled with each of the one or more sections, an elongate member movably coupled with the spring, and one or more brushes coupled to the elongate member, where the one or more brushes may move from a first predetermined angle to a second predetermined angle and enables wiping of the fluid from at least one of the one or more sections of the device.

In an aspect, in response to the set of actuation signals the spring may be configured to exert a force on the elongate member, where the exerted force facilitates movement of the elongate member from the first predetermined angle to the second predetermined angle, and where the one or more brushes coupled to the elongate member may enable wiping of the fluid from the at least one of the one or more sections of the device.

In an aspect, the first set of sensors may include any or a combination of ultrasonic sensor, infrared photoelectric sensor, water sensor.
In an aspect, the second set of sensors may include any or a combination of pulse rate sensor, pulse oximeter, and heart rate sensor.

In an aspect, the control unit may be communicatively coupled with one or more mobile computing devices through a communication module, where the one or more mobile computing devices may be associated with one or more pre-registered entities, and where the set of alert signals may be transmitted to the one or more mobile computing devices through the communication module.

In an aspect, the sensed health parameters may be recorded in a second dataset of the control unit, and where the second dataset may facilitate monitoring the heart rate of the one or more pre-registered entities.

In an aspect, the device may include an alert unit operatively coupled with the control unit, and where the alert unit may get activated in response to the set of alert signals, and where the alert unit may includes any or a combination of light emitting diode, buzzer, and alarm.
In an aspect, the fluid may include any or a combination of water, fog, sweat and dew.
In an aspect, the device may be adapted to be worn by the entity and may be configured in form of spectacles, goggle, and glasses frame.

BRIEF DESCRIPTION OF THE DRAWINGS

The accompanying drawings are included to provide a further understanding of the present disclosure, and are incorporated in and constitute a part of this specification. The drawings illustrate exemplary embodiments of the present disclosure and, together with the description, serve to explain the principles of the present disclosure.

The diagrams are for illustration only, which thus is not a limitation of the present disclosure, and wherein:

FIG. 1 illustrates a block diagram of proposed device to facilitate health monitoring and wiping of a fluid, in accordance with an embodiment of the present disclosure.

FIG. 2 illustrates exemplary functional components of a control unit of the proposed device to facilitate health monitoring and wiping of a fluid, in accordance with an embodiment of the present disclosure.

FIG. 3 illustrates an exemplary view of the proposed device to facilitate health monitoring and wiping of a fluid, in accordance with an embodiment of the present disclosure.

DETAILED DESCRIPTION

In the following description, numerous specific details are set forth in order to provide a thorough understanding of embodiments of the present invention. It will be apparent to one skilled in the art that embodiments of the present invention may be practiced without some of these specific details.

If the specification states a component or feature “may”, “can”, “could”, or “might” be included or have a characteristic, that particular component or feature is not required to be included or have the characteristic.

As used in the description herein and throughout the claims that follow, the meaning of “a,” “an,” and “the” includes plural reference unless the context clearly dictates otherwise. Also, as used in the description herein, the meaning of “in” includes “in” and “on” unless the context clearly dictates otherwise.

The present disclosure relates generally to field of health and care. More particularly, the present disclosure provides a device to facilitate health monitoring and wiping of a fluid, where the device is associated with an entity.

FIG. 1 illustrates a block diagram of proposed device to facilitate health monitoring and wiping of a fluid, in accordance with an embodiment of the present disclosure.
As illustrated in FIG. 1, the proposed device 100 (also referred to as device 100, herein) can include one or more sections, where the one or more sections can include a first set of sensors 102, a second set of sensors 104, a wiping assembly 106, a control unit 108, and an alert unit 110. The device 100 can facilitate in monitoring health of an entity, where the entity can be associated with the device 100. The device 100 can enable wiping a fluid from at least one of the one or more sections of the device 100. The control unit 108 can be operatively coupled with the first set of sensors 102, the second set of sensors 104 the wiping assembly 106 and the alert unit 110. In an illustrative embodiment, the device can be adapted to be worn by the entity and can be configured in form of spectacles, goggle, and glasses frame.

In an embodiment, first set of sensors 102 can be configured to sense fluid on at least one of the one or more sections of device 100 and correspondingly generate first set if signals. The generated first set of signals can be in electrical form, where first set of signals can transmitted to the control unit 108. In an illustrative embodiment, the first set of sensors 102 can include any or a combination of ultrasonic sensor, infrared photoelectric sensor, water sensor, and likes.

In an embodiment, the second set of sensors 104 can be configured to detect health parameters of the entity and correspondingly generate a second set of signals. The generated second set of signals can be in electrical form, where the second set of signals can be transmitted to the control unit. In an illustrative embodiment, the second set of sensors 104 can include any or a combination of pulse rate sensor, pulse oximeter, heart rate sensor, and the likes.
In an embodiment, the wiping assembly 106 can be configured at a predetermined position on each of the one or more sections of the device 100. In another embodiment, the wiping assembly 106 can include a spring coupled with each of the one or more sections, an elongate member movably coupled with the spring, and one or more brushes coupled to the elongate member. The one or more brushes can move from first predetermined angle to second predetermined angle and enables wiping of the fluid from at least one of the one or more sections of the device 100.

In an embodiment, in response to the set of actuation signals, the spring can be configured to exert a force on the elongate member, where the exerted force facilitates movement of the elongate member from the first predetermined angle to the second predetermined angle. The one or more brushes can be coupled to the elongate member, where the one or more brushes can enable wiping of the fluid from the at least one of the one or more sections of the device 100.

In an embodiment, the control unit 108 can be configured can be configured to receive the first set of signals and a second set of signals in electrical form and convert the first set of signals and the second set of signals in machine readable form. In another embodiment, the control unit can include one or more processors coupled with a memory, the memory storing instructions executable by the one or more processors. The control unit can be configured to generate a set of actuation signals in response to the received first set of signals, where the set of actuation signals is transmitted to the wiping assembly 106. In yet another embodiment, the wiping assembly 106 can facilitate wiping the fluid from at least one of the one or more sections in response to the set of actuation signals.

In an embodiment, the control unit 108 can be configured to extract a third set of signals from the second set of signals, where the third set of signals can pertain to pulse rate associated with the entity. In another embodiment, the control unit 108 can be configured to compare the pulse rate with a first dataset, where the first dataset can include predetermined pulse rate limit. In yet another embodiment, the control unit 108 can be configured to generate a set of alert signals when at least one of the compared pulse rate are beyond the predetermined pulse rate limit. The control unit 108 can be configured to generate a set of warning signals when at least one of the compared pulse rate is found within the predetermined pulse rate limit.
In an illustrative embodiment, the control unit 108 can include any or a combination of microprocessor, microcontroller, Arduino Uno, At mega 328, and other similar processing unit, but not limited to the likes.

In an embodiment, the control unit 108 can be communicatively coupled with one or more mobile computing devices through a communication module, where the one or more mobile computing devices can be associated with one or more pre-registered entities, and where the set of alert signals and the set of warning signals can be transmitted to the one or more mobile computing devices through the communication module. In an illustrative embodiment, the communication module can include any or a combination of Wireless Fidelity (Wi-Fi) module, Bluetooth module, Li-Fi module, global system for mobile communication (GSM) module, optical fiber, Wireless Local Area Network (WLAN), ZigBee module, and the likes. In another illustrative embodiment, the one or more mobile computing devices can include any or a combination of cell phone, laptop, portable hand-held device, I-pad, tablet, and the likes.

In an embodiment, the sensed health parameters associated with the entity can be recorded and stored in a second dataset of the control unit 108, and where the second dataset can facilitate monitoring the heart rate of the one or more pre-registered entities.

In an embodiment, the device 100 can include an alert unit operatively coupled with the control unit 108, where the alert unit 110 can get activated in response to the set of alert signals. In an illustrative embodiment, the alert unit 110 can includes any or a combination of light emitting diode, buzzer, alarm, and the likes.

In an illustrative embodiment, when the entity wears the device 100 and the fluid is detected by the first set of sensor 102, the control unit 108 can be configured to generate the set of actuation signals and transmit the set of actuation signals to the wiping assembly 106. The wiping assembly can be configured to wipe the fluid from at least one of the one or more sections of the device 100 with help of the spring, an elongate member and the one or more brushes. In another illustrative embodiment, the second set of sensors 104 can be configured to sense the health parameters associated with the entity and transmit the second set of signals to the control unit 108. The control unit 108 can be configured to extract the pulse rate from the second set of signals and can compare the extracted pulse rate with the first dataset, where the first dataset can include the predetermined pulse rate limit. When the compared pulse rate is

found beyond the predetermined pulse rate limit, the control unit 108 can be configured to generate the set of alert signals and when compared pulse rate is found within the predetermined pulse rate limit, set if warning signals can be generated by the control unit 108.

In an illustrative embodiment, the sensed health parameters are recorded in a second dataset of the control unit, and where the second dataset can facilitate monitoring the pulse rate of the one or more pre-registered entities. In an illustrative embodiment, in response to the generation of the set of alert signals and the set of warning signals, the GSM module can be activated by the control unit 108, where the GSM module can facilitate sending an alert to the one or more preregistered entities through the one or more mobile computing devices and accordingly the one or more preregistered entities can take precaution and action to avoid health related risk.
FIG. 2 illustrates exemplary functional components of a control unit of the proposed device to facilitate health monitoring and wiping of a fluid, in accordance with an embodiment of the present disclosure.

As illustrated in an embodiment, the control unit 108 can include one or more processor(s) 202. The one or more processor(s) 202 can be implemented as one or more microprocessors, microcomputers, microcontrollers, digital signal processors, central processing units, logic circuitries, and/or any devices that manipulate data based on operational instructions. Among other capabilities, the one or more processor(s) 202 are configured to fetch and execute computer-readable instructions stored in a memory 204 of the control unit 108. The memory 204 can store one or more computer-readable instructions or routines, which may be fetched and executed to create or share the data units over a network service. The memory 204 can include any non-transitory storage device including, for example, volatile memory such as RAM, or non-volatile memory such as EPROM, flash memory, and the like.

In an embodiment, the control unit 108 can also include an interface(s) 206. The interface(s) 206 may include a variety of interfaces, for example, interfaces for data input and output devices, referred to as I/O devices, storage devices, and the like. The interface(s) 206 may facilitate communication of the control unit 108 with various devices coupled to the control unit 108. The interface(s) 206 may also provide a communication pathway for one or more components of control unit 108. Examples of such components include, but are not limited to, processing engine(s) 208 and data 210.

In an embodiment, the processing engine(s) 208 can be implemented as a combination of hardware and programming (for example, programmable instructions) to implement one or more functionalities of the processing engine(s) 208. In examples described herein, such combinations of hardware and programming may be implemented in several different ways. For example, the programming for the processing engine(s) 208 may be processor executable instructions stored on a non-transitory machine-readable storage medium and the hardware for the processing engine(s) 208 may include a processing resource (for example, one or more processors), to execute such instructions. In the present examples, the machine-readable storage medium may store instructions that, when executed by the processing resource, implement the processing engine(s) 208. In such examples, the control unit 108 can include the machine-readable storage medium storing the instructions and the processing resource to execute the instructions, or the machine-readable storage medium may be separate but accessible to control unit 108 and the processing resource. In other examples, the processing engine(s) 208 may be implemented by electronic circuitry. A database 210 can include data that is either stored or generated as a result of functionalities implemented by any of the components of the processing engine(s) 208.

In an embodiment, the processing engine(s) 208 can include an actuation unit 212, an extraction unit 214, a comparison unit 216, a signal generation unit 218, and other unit (s) 220. The other unit(s) 220 can implement functionalities that supplement applications or functions performed by the device 100 or the processing engine(s) 208.

The database 210 can include data that is either stored or generated as a result of functionalities implemented by any of the components of the processing engine(s) 208. It would be appreciated that units being described are only exemplary units and any other unit or sub-unit may be included as part of the device 100. These units too may be merged or divided into super-units or sub-units as may be configured.

As illustrated in FIG. 2, the control unit 108 can be configured to receive a first set of signals from a first set of sensors in electrical form and a second set of signals from a second set of sensors in electrical form. The control unit 108 can be configured to convert the first set of signals and the second set of signals in machine readable form. In an embodiment, the control unit 108 can be configured to extract a third set of signals from the second set of signals with help of the extraction unit 214, where the third set of signals can pertain to pulse rate associated with the entity. The control unit 108 can be configured to compare the pulse rate with a first dataset, with help of the comparison unit 216, where the first dataset can include predetermined pulse rate limit. The control unit 108 can be configured to generate a set of alert signals with help of the signal generation unit 218 when at least one of the compared pulse rate are beyond the predetermined pulse rate limit. The control unit 108 can be configured to generate set of warning signals with help of the signal generation unit 218 when at least one of the compared pulse rate is found within the predetermined pulse rate limit.

In an embodiment, the control unit 108 can be configured to generate a set of actuation signals with help of the actuation unit 212, upon receiving the first set of signals, where the set of actuation signals facilitates in movement of wiping assembly 106. The set of actuation signals can be transmitted to the wiping assembly 106, where the wiping assembly 106 can facilitate wiping the fluid from at least one of one or more sections of the device 100 in response to the set of actuation signals. The set of actuation signals can be generated in machine readable form by the actuation unit 212, where the set of actuation signals can be received by the wiping assembly 106. The wiping assembly 106 can include a spring, an elongate member and one or more brushes, where in response to the set of actuation signals received by the wiping assembly 106, the spring can be configured to exert a force on the elongate member, where the exerted force can facilitate movement of the elongate member from the first predetermined angle to the second predetermined angle. The one or more brushes can be coupled to the elongate member, where the one or more brushes can enable wiping of the fluid from the at least one of the one or more sections of the device 100.

In an embodiment, the extraction unit 214 can be configured to receive the second set of signals in electrical form and extract the third set of signals from the second set of signals in machine readable form. The third set of signals can pertain to pulse rate of the entity. In an illustrative embodiment, when the entity wears the device 100, the second set of sensors 104 can be configured to detect the health parameters associated with the entity and correspondingly generate a second set of signals, where the second set of signals can be transmitted to the extraction unit 214. The extraction unit 214 can be configured to extract the pulse rate of the entity in machine readable form and transmit the extracted pulse rate of the entity to the comparison unit 216.

In an embodiment, the extraction unit 214 can be configured to transmit the extracted pulse rate to the comparison unit 216 in machine readable form. The comparison unit 216 can be configured to compare the pulse rate with a first dataset, where the first dataset can include predetermined pulse rate limit. In an illustrative embodiment, the comparison unit 216 can be configured to receive the extracted pulse rate from the extraction unit 214 in machine readable form. The comparison unit 216 can facilitate in comparing the extracted pulse rate with a first dataset, where the first dataset can pertain to predetermined pulse rate limit. The comparison unit 216 can receive the extracted pulse rate from the extraction unit 214, and can compare with the first dataset stored in database 210. The predetermined pulse limit can include threshold values pertaining to the pulse rate associated with the entity. The comparison unit 216 can compare the extracted pulse rate, and can facilitate in finding whether the extracted pulse rate has reached the predetermined pulse rate limit. In another illustrative embodiment, the threshold value can include limit of sixty to hundred beats per minute for adults, but not limited to the likes.

In an illustrative embodiment, the comparison unit 216 can facilitate in comparing the received extracted pulse rate in machine readable form with help of a comparator. The comparator can enable comparing the extracted pulse rate with the predetermined pulse rate limit. The comparator can include an analogue comparator or a digital comparator. The digital comparators can compare the extracted pulse rate with the predetermined pulse rate limit. The digital comparators can facilitate comparison with help of logic gates such as AND, NOT or NOR gates. The digital comparator can be configured to accept the extracted pulse rate in the machine-readable form. Further three conditions can be applicable for the comparison of the extracted pulse rate with the predetermined pulse rate limit.

In an illustrative embodiment, the three conditions associated with the digital comparator can include a first condition, which can prevail when the extracted pulse rate is found equal to the predetermined pulse rate limit, a second condition can prevail when the extracted pulse rate is found beyond the predetermined pulse rate limit, and the third condition can prevail when the extracted pulse rate is found less than the predetermined pulse rate limit. The digital comparator can compare and transmit the compared pulse rate to the signal generation unit 218.

In an embodiment, the signal generation unit 218 can be configured to receive the compared pulse rate in machine readable form. The signal generation unit 218 can be configured to generate a set of alert signals when at least one of the compared pulse rate is found beyond the predetermined pulse rate limit. In an illustrative embodiment, the signal generation unit 218 can be configured to generate the set of alert signals, when the compared pulse rate is found beyond the threshold value, where the threshold value can include the limit of sixty to hundred beats per minute for adults, but not limited to the likes. When the compared pulse rate associated with the entity is found beyond hundred beats per minute by the comparison unit 216, the signal generation unit 218 can be configured to generate the set of alert signals and transmit the set of alert signals to an alert unit 110.

In an illustrative embodiment, the signal generation unit 218 can be configured to generate a set of warning signals, when at least one of the compared pulse rate is found within the predetermined pulse limit. When the compared pulse rate associated with the entity is found within sixty beats per minute by the comparison unit 216, the signal generation unit 218 can be configured to generate the set of warning signals and transmit the set of warning signals to one or more mobile computing devices.

In an illustrative embodiment, the sensed health parameters through the second set of sensors 104 associated with the entity can be recorded and stored in a second dataset of the control unit 108, and where the second dataset can facilitate monitoring the heart rate of the one or more pre-registered entities. In another illustrative embodiment, the second dataset can be stored in the database 210. The one or more preregistered entities are the entities whose pulse rate are recorded and stored in the database 210 along with an identity number, where the identity number can include any or a combination of preregistered cell phone number, medical identity number, and the likes.

FIG. 3 illustrates an exemplary view of the proposed device to facilitate health monitoring and wiping of a fluid, in accordance with an embodiment of the present disclosure.

As illustrated in FIG. 3, the device 100 can include one or more sections, where the one or more sections can include a first set of sensors 102, a second set of sensors 104, a wiping assembly 106, a control unit 108 and an alert unit 110. The first set of sensors 102 is configured to sense a fluid on at least one of the one or more sections of the device 100. The fluids can include any or a combination of water, fog, sweat, dew, and the likes. In an illustrative embodiment, the device 100 can be adapted to be worn by the entity and can be configured in form of spectacles, goggle, glasses frame, and the likes. The wiping assembly 106 can include a spring 106-1 coupled with each of the one or more sections, an elongate member 106-3 movably coupled with the spring 106-1 and one or more brushes 106-2 coupled to the elongate member 106-3, where the one or more brushes 106-2 move from a first predetermined angle to a second predetermined angle and enables wiping of the fluid from at least one of the one or more sections of the device 100. The control unit 108 can be configured to generate a set of actuation signals in response to the received first set of signals, where the set of actuation signals can be transmitted to the wiping assembly 106, where the wiping assembly 106 can facilitate wiping the fluid from at least one of the one or more sections in response to the set of actuation signals.

In an illustrative embodiment, presence of water droplets on the device 100 like spectacles, sun-glasses, welding glass, or any other glass can be sensed by the first set of sensors 102. The first set of sensors 102 can be configured to sense the water droplets and the spring 106-1 can be configured to exert force or pressure on the elongate member 106-3 upon receiving the set of actuation signals from the control unit 108. The one or more brushes can be configured to wipe the fluid from at least one of the one or more sections of the device 100. In another illustrative embodiment, the second set of sensors 104 can be configured in arm of the device 100. The sensed health parameters associated with the entity can be stored and recorded in a second dataset, where the second dataset facilitates monitoring of the entity.

In an illustrative embodiment, the control unit 108 can be configured to extract a third set of signals from the second set of signals, wherein the third set of signals pertain to pulse rate associated with the entity. The control unit 108 can be configured to compare the pulse rate with a first dataset, where the first dataset includes predetermined pulse rate limit and generate a set of alert signals when at least one of the compared pulse rate is beyond the predetermined pulse rate limit and generate a set of warning signals when at least one of the compared pulse rate is within the pulse rate limit.

In an illustrative embodiment, the control unit 108 can be communicatively coupled with one or more mobile computing devices through a communication module, where the one or more mobile computing devices are associated with one or more pre-registered entities, and where the set of alert signals and the set of warning signals are transmitted to the one or more mobile computing devices through the communication module. In an illustrative embodiment, the control unit 108 can be configured to will activate global system for mobile communication (GSM) module and sends an alert message on the one or more mobile computing devices associated with the one or more preregistered entities, where the one or more mobile computing devices can include any or a combination of cell phone, laptop, portable hand-held device, and the likes. The cell phone number can be registered in the control unit 108. Once the alert message has been received on the registered cell phone associated with the preregistered entity, the preregistered entity can take necessary measures to prevent from heart related problem and control by contacting medical practitioner, physician, doctor, and the likes. In yet another illustrative embodiment, the communication module can include any or a combination of Wireless Fidelity (Wi-Fi) module, Bluetooth module, Li-Fi module, global system for mobile communication (GSM) module, optical fiber, Wireless Local Area Network (WLAN), ZigBee module, and the likes.

Thus, it will be appreciated by those of ordinary skill in the art that the diagrams, schematics, illustrations, and the like represent conceptual views or processes illustrating systems and methods embodying this invention. The functions of the various elements shown in the figures may be provided through the use of dedicated hardware as well as hardware capable of executing associated software. Similarly, any switches shown in the figures are conceptual only. Their function may be carried out through the operation of program logic, through dedicated logic, through the interaction of program control and dedicated logic, or even manually, the particular technique being selectable by the entity implementing this invention. Those of ordinary skill in the art further understand that the exemplary hardware, software, processes, methods, and/or operating systems described herein are for illustrative purposes and, thus, are not intended to be limited to any particular name.

While embodiments of the present invention have been illustrated and described, it will be clear that the invention is not limited to these embodiments only. Numerous modifications, changes, variations, substitutions, and equivalents will be apparent to those skilled in the art, without departing from the spirit and scope of the invention, as described in the claim.
While the foregoing describes various embodiments of the invention, other and further embodiments of the invention may be devised without departing from the basic scope thereof. The scope of the invention is determined by the claims that follow. The invention is not limited to the described embodiments, versions or examples, which are included to enable a person having ordinary skill in the art to make and use the invention when combined with information and knowledge available to the person having ordinary skill in the art.

ADVANTAGES OF THE PRESENT DISCLOSURE

The present disclosure provides a device that facilitates automatic cleaning of spectacles and enables making cleaning process fast and easy for the spectacles.
The present disclosure provides a device that is cost-effective, ready and easy to use.
The present disclosure provides a device that is easy to wear, carry and remove.
The present disclosure provides a device that is long-lasting and do not get damaged easily.
The present disclosure provides a device that is useful in almost all the glasses such as spectacles, sun-glasses, welding glasses and the likes.
The present disclosure provides a device that can be considered as a life-saving device.
The present disclosure provides a device that has two in one functionality. Automatic glass cleaning and alertness regarding heart attacks.
The present disclosure provides a device that helps in monitoring health of a person wearing the device and alerting the person for emergency situation.

RAS INTELLECT
Your Trusted Partner in Intellectual Property

CLAIM

I/We Claim,

1. A device (100) to facilitate health monitoring and wiping of a fluid, said device (100) comprising:

One or more sections comprising:

a first set of sensors (102) configured to sense the fluid on at least one of the one or more sections and correspondingly generate a first set of signals;

a second set of sensors (104) configured to sense health parameters of an entity associated with the device and correspondingly generate a second set of signals;

a wiping assembly (106) configured at a predetermined position on each of the one or more sections;

a control unit (108) operatively coupled with the first set of sensors (102), the second set of sensors (104), and the wiping assembly (106), wherein the control unit (108) including one or more processors coupled with a memory, the memory storing instructions executable by the one or more processors and configured to generate a set of actuation signals in response to the received first set of signals, wherein the set of actuation signals is transmitted to the wiping assembly (106), wherein the wiping assembly (106) facilitates wiping the fluid from at least one of the one or more sections in response to the set of actuation signals, and wherein the control unit (108) is configured to:

extract a third set of signals from the second set of signals, wherein the third set of signals pertain to pulse rate associated with the entity;

compare the pulse rate with a first dataset, wherein the first dataset includes predetermined pulse rate limit;

generate a set of alert signals when at least one of the compared pulse rate is beyond the predetermined pulse rate limit; and

generate a set of warning signals when at least one of the compared pulse rate is within the pulse rate limit.

2. The device (100) as claimed in claim 1, wherein the wiping assembly (106) including

a spring (106-1) coupled with each of the one or more sections;

an elongate member (106-3) movably coupled with the spring (106-1); and

one or more brushes (106-2) coupled to the elongate member (106- 3), wherein the one or more brushes (106-2) move from a first predetermined angle to a second predetermined angle and enables wiping of the fluid from at least one of the one or more sections of the device (100).

3. The device (100) as claimed in claim 2, wherein in response to the set of actuation signals the spring (106-1) is configured to exert a force on the elongate member (106-3), wherein the exerted force facilitates movement of the elongate member (106-3) from the first predetermined angle to the second predetermined angle , and wherein the one or more brushes (106-2) coupled to the elongate member (106-3) enables wiping of the fluid from the at least one of the one or more sections of the device (100).

4. The device (100) as claimed in claim 1, wherein the first set of sensors (102) include any or a combination of ultrasonic sensor, infrared photoelectric sensor, water sensor.

5. The device (100) as claimed in claim 1, wherein the second set of sensors (104) include any or a combination of pulse rate sensor, pulse oximeter, and heart rate sensor.

6. The device (100) as claimed in claim 1, wherein the control unit (108) is communicatively coupled with one or more mobile computing devices through a communication module, wherein the one or more mobile computing devices are associated with one or more pre-registered entities, and wherein the set of alert signals and the set of warning signals are transmitted to the one or more mobile computing devices through the communication module.

7. The device (100) as claimed in claim 5, wherein the sensed health parameters are recorded in a second dataset of the control unit (108), and wherein the second dataset facilitates monitoring the pulse rate of the one or more pre-registered entities.

8. The device (100) as claimed in claim 1, wherein the device (100) includes an alert unit (110) operatively coupled to the control unit (108), and wherein the alert unit (110) gets activated in response to the set of alert signals, and wherein the alert unit (110) includes any or a combination of light emitting diode, buzzer, and alarm.

9. The device (100) as claimed in claim 1, wherein the fluid includes any or a combination

of water, fog, sweat and dew.

10. The device (100) as claimed in claim 1, wherein the device (100) is adapted to be worn by the entity and is configured in form of spectacles, goggle, and glasses frame.

Dated this _DD_ day of month 20_YY_

Signature of the Applicant/PatentAgent

Name of the Applicant/Patent Agent

Patent Agent Number

AGENT FOR THE APPLICANT(S)

RAS INTELLECT
Your Trusted Partner in Intellectual Property

ABSTRACT

DEVICE TO FACILITATE HEALTH MONITORING AND WIPING OF A FLUID

The present disclosure pertains to a device (100) including one or more sections with a first set of sensors (104) configured to sense the fluid on at least one of the one or more sections, a second set of sensors (104) configured to sense health parameters of an entity associated with the device (100) and a wiping assembly (106) configured at a predetermined position on each of the one or more sections and a control unit (108) configured to generate a set of alert signals when at least one of compared pulse rate is beyond predetermined pulse rate limit, generate a set of warning signals when at least one of the compared pulse rate is within the pulse rate limit. The sensed health parameters are recorded in a second dataset of the control unit (108) where the second dataset facilitates monitoring the heart rate of one or more pre-registered entities.

FIG. 1

Dated this _DD_ day of month 20_YY_

Signature of the Applicant/Patent Agent
Name of the Applicant/Patent Agent
Patent Agent Number
AGENT FOR THE APPLICANT(S)

RAS INTELLECT
Your Trusted Partner in Intellectual Property

DRAWINGS

Applicant Name: ABC

Total No. of Pages: 03
Page 1 of 03

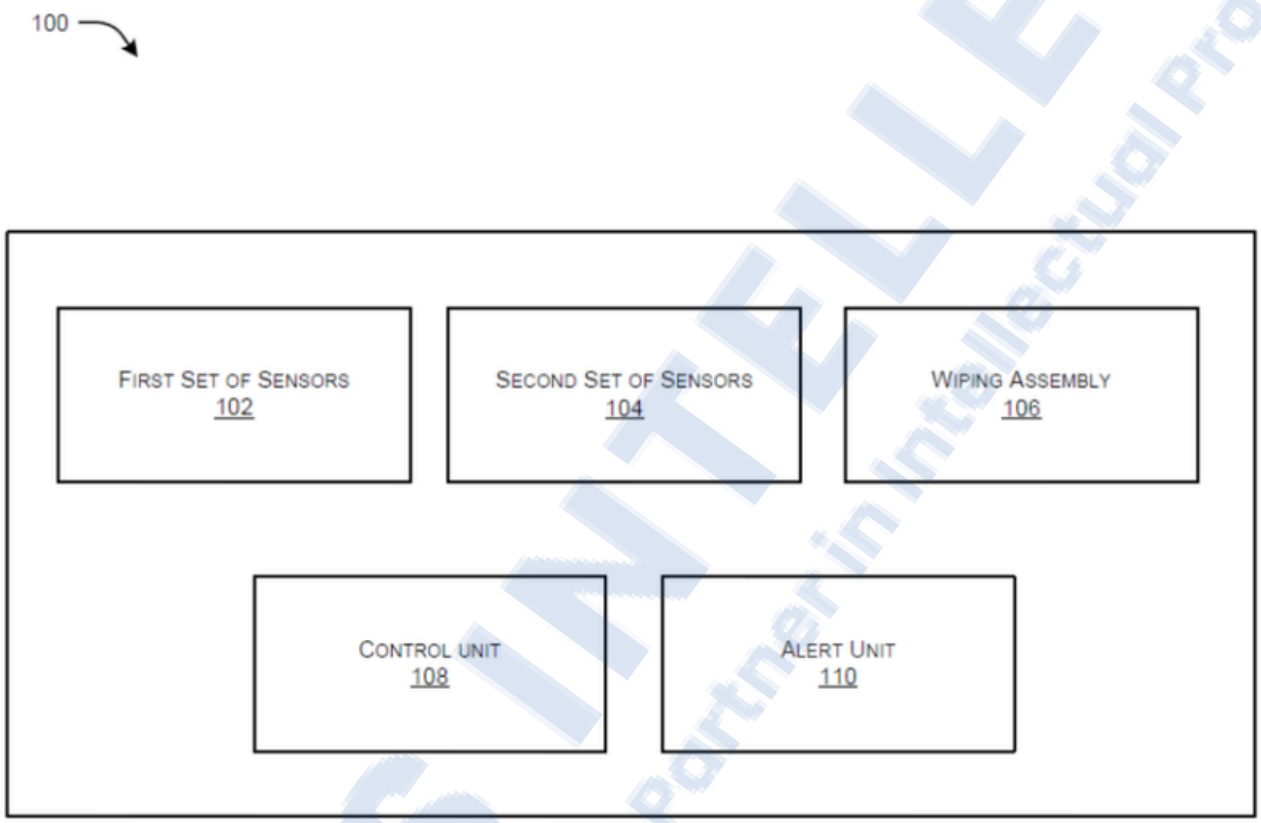

FIG. 1

Dated this _DD_ day of month 20_YY_

Signature of the Applicant/Patent Agent
Name of the Applicant/Patent Agent
Patent Agent Number
AGENT FOR THE APPLICANT(S)

RASINTELLECT
Your Trusted Partner in Intellectual Property

Applicant Name: ABC

Total No. of Pages: 03
Page 2 of 03

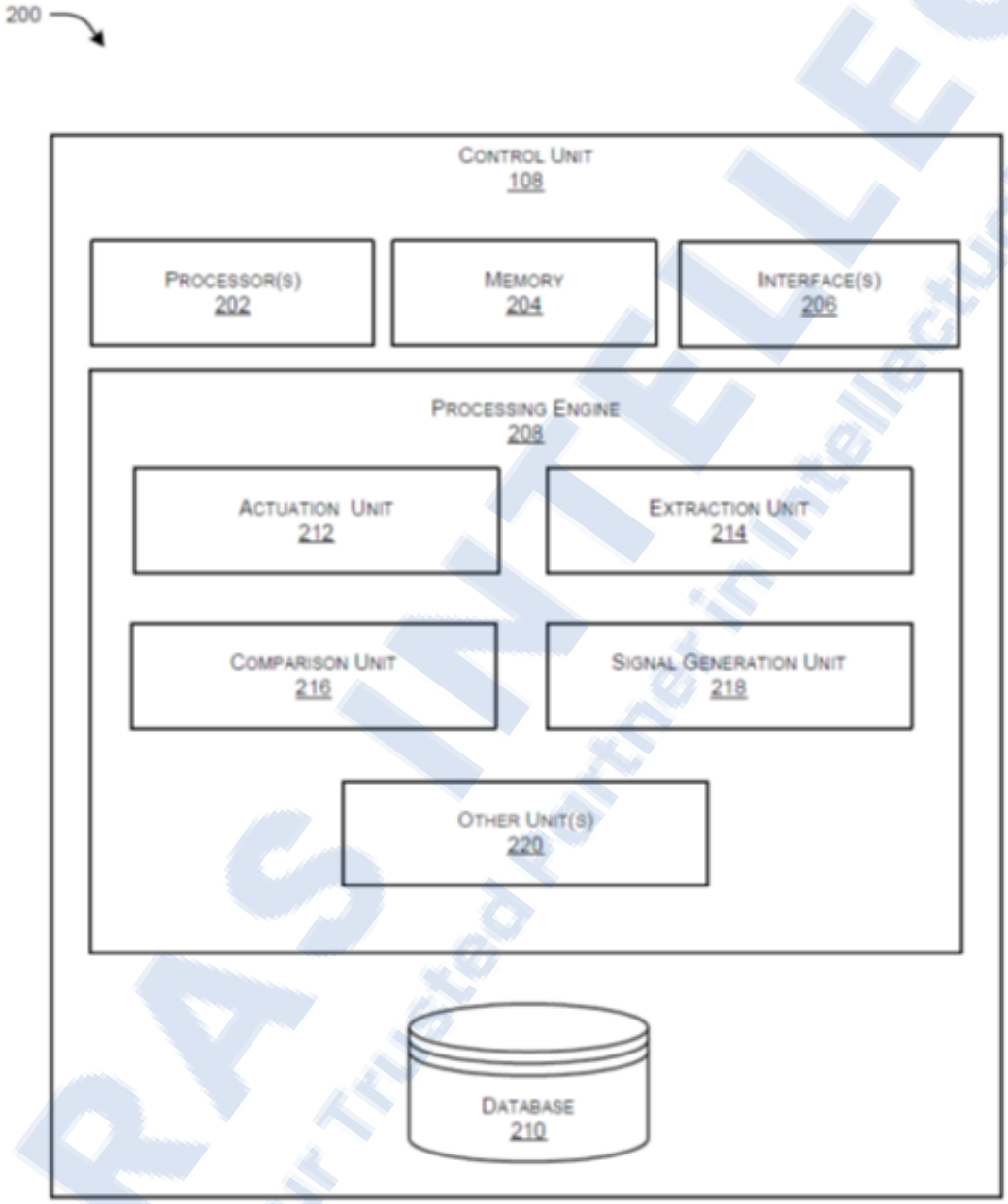

FIG. 2

Dated this _DD_ day of month 20_YY_

Signature of the Applicant/Patent Agent
Name of the Applicant/Patent Agent
Patent Agent Number
AGENT FOR THE APPLICANT(S)

RASINTELLECT
Your Trusted Partner in Intellectual Property

Applicant Name: ABC

Total No. of Pages: 03
Page 3 of 03

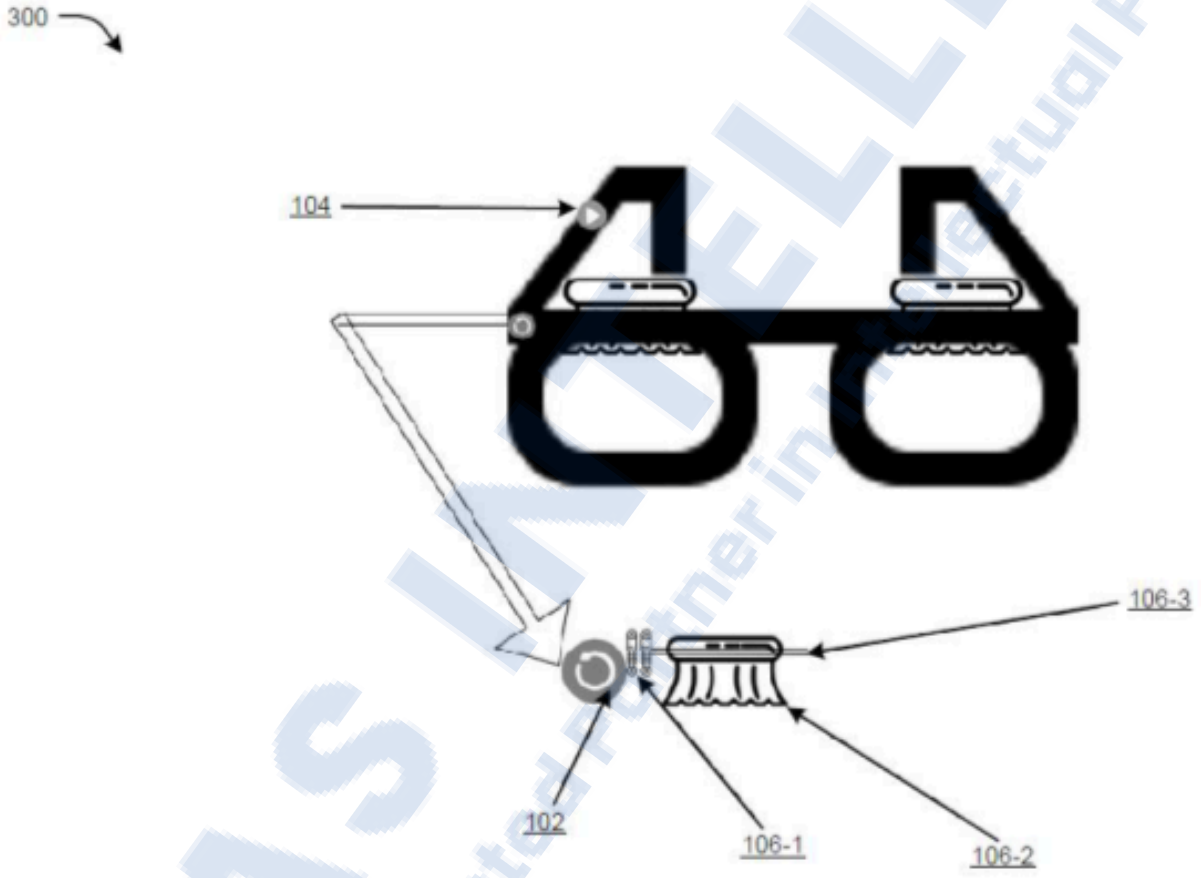

FIG. 3

Dated this _DD_ day of month 20_YY_

Signature of the Applicant/Patent Agent
Name of the Applicant/Patent Agent
Patent Agent Number
AGENT FOR THE APPLICANT(S)

EXAMPLE 2

FORM 2
THE PATENTS ACT 1970 (39 of 1970)
&
The Patent Rules 2003

COMPLETE SPECIFICATION
(See sections 10 & rule 13)

TITLE OF THE INVENTION

DEVICE TO FACILITATE HEALTH MONITORING AND WIPING OF A FLUID

APPLICANT (S)
NAME : ABC
NATIONALITY : Indian
ADDRESS : House No. – 123,
P.O. – EFG,
District – HIJ,
State – KLM,
Pin – 712345, India.

PREAMBLE TO THE DESCRIPTION

COMPLETE SPECIFICATION

The following specification particularly describes the invention and the manner in which it is to be performed.

TECHNICAL FIELD
The present disclosure details a method for preparing 3D printable or Additive manufacturing resins from Neem oil, sourced from various components of the Neem tree. The resin is compatible with Paste Extrusion and Vat Photopolymerization techniques, including Stereolithography (SLA), Digital Light Processing (DLP), Liquid Crystal Display (LCD), Two-Photon Polymerization, Continuous Liquid Interface Production (CLIP), Continuous Digital Light Processing (CDLP), Hot Lithography, and Volumetric 3D printing. These techniques utilize light sources like lasers and ultraviolet (UV) light to cure or polymerize the resin. The resulting products are suitable for diverse biomedical applications, including scaffolds and patches for tissue engineering, medical and dental devices, food packaging, architectural models, building materials, and wearable.

BACKGROUND
This invention relates to additive manufacturing methods, or 3D printing, which offer advantages over traditional manufacturing, including broader material choices, enhanced design flexibility, material efficiency, accuracy, cost efficiency, and production speed. These methods enable the fabrication of complex geometries and intricate structures that conventional techniques like casting, forging, and machining cannot achieve. Additive manufacturing reduces material waste by depositing material layer by layer and allows for shorter lead times by enabling direct production from digital files, eliminating intermediate tooling steps. This results in rapid prototyping capabilities and contributes to greater manufacturing efficiency, reduced costs, accuracy, production speed and enhanced product innovation across various industries.

In recent years, significant attention has been given to the environmental pollution caused by fossil fuels and petrochemical waste, prompting efforts to develop eco-friendly materials for additive manufacturing (AM). The challenge remains to produce biodegradable materials that meet the necessary fabrication and performance standards for 3D printing. This field has seen constant innovation, focusing on methods to create biocompatible and biodegradable materials from organic source. Effective fabrication and performance are essential in these methods, ensuring the materials can be reliably used in Additive Manufacture processes while adhering to sustainability objectives.

Present methods for producing biodegradable and or biocompatible materials for 3D printing predominantly utilize conventional materials such as Polyglycolide (PGDCA), Polypropylene Fumarate (PPF), Polyhydroxyethyl Methacrylate (pHEMA), Bisphenol A Ethoxylate Dimethacrylate (BisEMA), Trimethylolpropane Triacrylate (TMPTA), and Urethane Acrylates, all of which are derived from petroleum-based sources and are obtained from multiple synthetic routes

Although, Polylactic Acid (PLA) and Polycaprolactone (PCL) are known to be biocompatible and are derived from renewable sources, their direct application as stereo-lithography resins is restricted due to the absence of photosensitive chemical groups necessary for photo-polymerization. While PLA and PCL can be chemically modified to incorporate photo-curable groups, this modification process is generally intricate, labor-intensive, and involves the use of toxic and hazardous chemicals, thus posing additional challenges. Furthermore, while plant-based oil and or vegetable oil resins such as soybean oil epoxidized acrylate have been utilized for fabricating biocompatible scaffolds using multidimensional stereolithography, these materials inherently lack any medicinal properties, limiting their potential applications in the biomedical field.

On the other hand, the present disclosure relates to a neem oil-based acrylate resin for 3D printing, leveraging neem oil's long-standing medicinal use in Ayurvedic medicine for its therapeutic benefits, including treatment of diabetes and cardiovascular diseases. This resin formulation enables the production of biodegradable and biocompatible materials with inherent medicinal and antimicrobial properties, setting it apart from conventional biodegradable materials that lack such attributes. The neem oil resin expands applicability across pharmaceutical, medical, biomedical, oral healthcare, and packaging sectors. The disclosed method for producing neem oil based acrylate resin involves the chemical modification of neem oil through epoxidation followed by acrylation processes to create a photo-polymerizable resin suitable for additive manufacturing applications, particularly for use in technologies such Paste Extrusion and Vat Photo-polymerization techniques, such as Stereolithography (SLA), Digital Light Processing (DLP), Liquid Crystal Display (LCD), Two-Photon Polymerization, Continuous Liquid Interface Production (CLIP), Continuous Digital Light Processing (cDLP), Hot Lithography, Volumetric 3D printing, UV light based paste extrusion and any other machine or equipment or arrangement which can use any light source including laser, ultraviolet (UV) light of appropriate wavelength to cure or solidify or polymerize the resin and form final products. This resin provides optimal performance characteristics, including mechanical strength, biodegradability, and printability, while imparting the therapeutic functionality and medicinal value of neem oil.

Furthermore, there exists need to address the forementioned limitations by developing methods capable of producing biodegradable and or biocompatible materials and/or monomers or acrylates for 3D printing specifically that are UV curable from organic sources or bio-based, while eliminating or significantly reducing emission of hazardous and toxic chemicals during the production process. These methodologies should ensure the materials are environmentally sustainable and suitable for applications in pharmaceuticals, medical, biomedical, oral healthcare and packaging. The resulting materials must exhibit biodegradability, biocompatibility, non-toxicity and strong mechanical performance, meeting stringent regulatory requirements.

The present invention addresses the above challenge and proposing a novel method for producing biodegradable and or biocompatible materials/monomers/acrylates for 3D printing that not only eliminate the use of toxic and hazardous chemicals but also extends the applicability of these materials to various other fields. By addressing the gaps in current methodologies, this invention seeks to provide more efficient, versatile, and environmentally friendly solutions for additive manufacturing.

SUMMARY

The present disclosure provides a novel method for preparing biodegradable and or biocompatible 3D printable materials derived from neem oil, addressing several limitations combined with conventional methods. Specifically, this invention aims to overcome the challenges of producing acrylate/monomers suitable for 3D printing by offering a method that is both environmentally friendly and versatile in application.

The object embodiment of the present invention to create a neem oil-based acrylate resin for Vat photo-polymerization techniques. This method involves epoxidation reaction first in which catalysts like Methyltrioxorhenium (MTO) is used to carry out epoxidation of triglyceride molecule at room temperature. This is followed by acrylation with acrylic acid in the presence of catalyst named Triethylamine in which epoxy of triglyceride converted into acrylates. The resultant acrylate is then converted into a resin by incorporating Photoinitiators Irgacure (Bis (2,4,6-trimethylbenzoyl)-phenylphosphine oxide) and Curcumin (1,7-bis (4-hydroxy-3-methoxyphenyl)-1,6-heptadiene-3,5-dione), making it suitable for Paste Extrusion and Vat photo-polymerization technique such as Stereolithography (SLA), Digital Light Processing (DLP), Liquid Crystal Display (LCD), Two-Photon Polymerization, Continuous Liquid Interface Production (CLIP), Continuous Digital Light Processing (cDLP), Hot Lithography, Volumetric 3D printing, UV light based paste extrusion and any other machine or equipment or arrangement which can use any light source including laser, ultraviolet (UV) light of appropriate wavelength to cure or solidify or polymerize the resin and form final products in 3D printing.

This method offers several advantages over conventional approaches. Firstly, it eliminates the need for toxic and hazardous chemicals in the preparation process, ensuring that the plant-based oil and or vegetable oil can be converted into resins in an environmentally safe manner. Additionally, the use of neem oil bio-based resins aligns with the increasing emphasis on sustainable and biodegradable and or biocompatible materials, as opposed to materials which are petroleum-based and are obtained from multiple synthetic routes.

The present disclosure describes a neem oil-based resin that holds promising potential for a range of applications which include pharmaceutical, medical, biomedical, oral healthcare, and packaging sectors, wherein the resin biodegradability and biocompatibility can be particularly advantageous. Furthermore, neem oil's historical medicinal use and therapeutic properties enhance the resin's suitability for creating biomedical, medical, and pharmaceutical products such as scaffolds and patches for tissue engineering, medical and dental devices, food packaging materials, architectural models, building materials, wearable, fashion items, and more.

Concluding, the present invention that is a method or route for the development of novel neem oil based or bio-based materials or acrylate resin for 3D printing not only provides a more sustainable, non-toxic and non-hazardous alternative to conventional methods but also contributes to the broader goal of reducing environmental impact and advancing the field of 3D printing with new, versatile materials.

Furthermore, these aspects of the present disclosure, along with the various features of novelty that characterize the present disclosure, are pointed in the below description. For a better understanding of the present disclosure, its operating advantages, and the specific objects attained by its uses, reference should be made to the accompanying drawing and descriptive matter in which there is illustrated an exemplary embodiment of the present disclosure.

BRIEF DESCRIPTION OF THE DRAWINGS

The advantages and features of the present disclosure will become better understood with reference to the following detailed description taken in conjunction with the accompanying drawings, in which:

Figure 1 illustrates a flow diagram which shows steps of the method in a sequence for producing biodegradable and or biocompatible resin suitable for Paste Extrusion and Vat Photo-polymerization from the organic material, in accordance with an exemplary embodiment of the present disclosure.

Figure 2 illustrates the process whereby triglyceride molecules present in neem oil are converted into epoxide groups. These epoxides are then further reacted with acrylic acid to form acrylates through an acrylation process. Subsequently, the acrylate monomers derived from neem oil mixed with photoinitiators undergo free radical polymerization upon exposure to ultraviolet (UV) light.

Figure 3 illustrates developed neem oil-based 3D printable resin.

Figure 4 illustrates the FTIR spectra of NO (neem oil), ENO (epoxidized neem oil), and AENO (acrylate of epoxidized neem oil). The presence of characteristic peaks at various wavenumbers signifies functional groups commonly found in vegetable oils and their epoxides and acrylates.

Figure 5 illustrates 1H NMR spectra and 13C NMR spectra of neem oil (NO), epoxidized neem oil (ENO), and acrylate of epoxidized neem oil (AENO). (a) Functional group present in triglycerides of neem oil (NO), epoxidized neem oil (ENO), and acrylate of epoxidized neem oil (AENO) (b) 1H NMR spectra and (c) 13C NMR spectra highlight characteristic proton and carbon atom signals respectively corresponding to the functional groups present in neem oil (NO), epoxidized neem oil (ENO), and acrylate of epoxidized neem oil (AENO) sample, with notable shifts indicating the successful epoxidation and acrylation processes.

DETAILED DESCRIPTION

The exemplary embodiments described herein detail various implementations and are subject to many variations. This disclosure provides a method for preparing 3D printable resin derived from neem oil, specifically designed for use in Vat Photopolymerization techniques such as Stereolithography (SLA), Digital Light Processing (DLP) Liquid Crystal Display (LCD), Two-Photon Polymerization, Continuous Liquid Interface Production (CLIP), Continuous Digital Light Processing (cDLP), Hot Lithography, Volumetric 3D printing. Additionally, it is not limited to Vat photopolymerisation; the resin can also be utilized in other techniques such as light-based paste extrusion or other techniques which utilize light sources like lasers and ultraviolet (UV) light to cure or polymerize the resin. However, various modifications and alternative methods are contemplated, encompassing broader applications without deviating from the spirit or scope of the present disclosure, including potential biomedical uses such as scaffolds and patches for tissue engineering.

The terms “a” and “an” herein do not denote a limitation of quantity, but rather denote the presence of at least one of the referenced items.
The terms “describing”, “comprising”, “describe”, and variations thereof signify the presence of a component.

The present disclosure describes a method to overcome various existing problems related to the preparing biodegradable material/polymer for 3D printing wherein the invention provides a method to prepare acrylate/materials convertible into resin without emitting any toxic chemical. Further, the disclosed method manufacturing 3D printing material having application in diverse fields, including pharmacy, medical, biomedical, oral healthcare, packaging, and more.

The present invention relates to a method for preparing a biodegradable or biocompatible resin derived from neem oil, as illustrated in Figure 1. In one embodiment, the method comprises a series of steps, including, but not limited to, an epoxidation step, an acrylation step, a resin formulation step, and a curing step through Vat photopolymerization techniques such as Stereolithography (SLA), Digital Light Processing (DLP), Liquid Crystal Display (LCD), Two-Photon Polymerization, Continuous Liquid Interface Production (CLIP), Continuous Digital Light Processing (cDLP), Hot Lithography, Volumetric 3D printing, UV light based paste extrusion and any other machine or equipment or arrangement which can use any light source including laser, ultraviolet (UV) light of appropriate wavelength to cure or solidify or polymerize the resin and form final products. The method described herein utilizes a resin formulation that can be cured using different light sources with varying wavelengths, depending on the specific photo initiator compatible with the wavelength used in the curing process. The curing process involves the hardening of the resin layer by layer to construct the final three-dimensional object.

In one embodiment of the present invention, a method for the epoxidation of neem oil utilizing Methyltrioxorhenium (MTO) as a catalyst is disclosed. This method selectively converts carbon-carbon double bonds present in the unsaturated fatty acid chains of neem oil into epoxide functional groups, as illustrated in Figure 2. The resultant epoxidized neem oil can be applied in various high-value applications, including the acrylation of epoxidized neem oil to produce photopolymerizable resins, polyol formation for polyurethane resin production in coatings and elastomers, and enzymatic polymerization to achieve biocompatible and biodegradable networks. Alternative methods for epoxidizing plant-based oils, such as Performic Acid or Peracetic Acid epoxidation, enzymatic epoxidation, heterogeneous catalysis using ion exchange resins, and photocatalytic epoxidation via UV-light activated catalysis, are also acknowledged. However, the use of MTO as a catalyst offers significant advantages, facilitating a more efficient and selective reaction.

Further, the technical method begins with preparing a reaction mixture by dissolving neem oil in a suitable solvent, such as dichloromethane (DCM), chloroform, or ethyl acetate, using magnetic or mechanical stirring. Once the neem oil is completely dissolved, a calculated amount of hydrogen peroxide and MTO is slowly added under continuous stirring to ensure uniform mixing and controlled release of oxygen. The epoxidation reaction proceeds at room temperature for 2 hours, resulting in the formation of epoxide groups at each unsaturated site in the triglycerides, while the remainder of the triglyceride structure remains unchanged.

Additionally, the epoxidation reaction progress is monitored using various analytical techniques, including Fourier-transform infrared spectroscopy (FTIR) to detect the formation of epoxide groups and nuclear magnetic resonance (NMR) spectroscopy (both 1H NMR and 13C NMR) to quantify the degree of epoxidation as shown in Figure 4 and Figure 5. Upon completion of the reaction, the mixture is cooled to room temperature, and the work-up procedure involves the removal of the catalyst and un-reacted hydrogen peroxide. The mixture is typically washed with an aqueous sodium bisulfate solution to neutralize any residual oxidants, followed by water to remove remaining salts and impurities. The organic phase containing the epoxidized neem oil is then dried over anhydrous sodium sulfate or magnesium sulfate to eliminate traces of moisture, and the solvent is evaporated under reduced pressure using a rotary evaporator. The final product is characterized for its oxirane content and can be utilized in formulating biodegradable and biocompatible resins, coatings, plasticizers, lubricants, sealants, adhesives etc., providing a scalable and environmentally friendly solution for a variety of industrial applications.

Another embodiment of the present invention discloses chemical process for the acrylation of epoxidized neem oil, wherein epoxidized oil is reacted with acrylic acid to produce acrylate of epoxidized neem oil shown in Figure 2. This acrylation process is a critical chemical modification that enhances the functionality of the epoxidized oil by introducing acrylate groups. This modification generates acrylate of epoxidized neem oil, making it suitable for a wide range of applications.

Furthermore, the acrylates of epoxidized neem oil exhibits excellent mechanical, chemical, and thermal properties, making it suitable for various industries. In coatings, it is ideal for laser, light, and UV-curable applications due to rapid curing and strong adhesion. In adhesives, it offers strong bonding and chemical resistance for structural applications in construction and electronics. Additionally, it is used in high-performance inks, paints, and varnishes. In medical and dental fields, it can be used for biodegradable resins in dental fillings and prosthetics. Its properties also make it suitable for composite materials, 3D printing resins, and eco-friendly packaging, aligning with sustainability goals.

Moreover, to verify the incorporation of the acrylate group into the triglyceride molecule after the acrylation process, appropriate analytical methods such as Fourier-transform infrared spectroscopy (FTIR) and nuclear magnetic resonance (NMR) spectroscopy (1H NMR and/or 13C NMR) are employed. The Fourier transform infrared (FTIR) spectra of neem oil, epoxidized neem oil, and acrylated epoxidized neem oil are recorded using a Perkin-Elmer spectrophotometer in ATR (attenuated total reflection) mode at room temperature. The spectra are scanned over a range of 4000 to 400 cm^{-1} with resolution of 4 cm. Additionally, 1H NMR and 13C NMR analyses of neem oil, epoxidized neem oil, and acrylated epoxidized neem oil in deuterated chloroform (CDCl3) are conducted using JEOL ECX500 spectrometer equipped with 5 mm Broadband Observe (BBO) and Broadband (BB) probe, operating at 500 MHz and maintained at 25 °C.

In addition to disclosed primary method of acrylation in above embodiment, which involves the reaction of epoxidized neem oil with acrylic acid, several alternative methods can be considered. One possibility is the use of Acryloyl Chloride, reacted with neem oil in the presence of base scavengers like triethylamine. Another option is Enzymatic Acrylation, where lipase enzymes serve as biocatalysts to facilitate the reaction and Third option is boron tri-fluoride (BF3•OEt2) can be employed as a Lewis acid catalyst to directly acrylate vegetable oils without the need for prior epoxidation. These alternative methods, while distinct from the primary process, offer viable possibilities for acrylating neem oil and can enhance the versatility and efficiency of chemical modifications for various applications such as coatings, adhesives, biomedical materials, and biodegradable/ biocompatible resins.

The present invention further describes the acrylation of epoxidized neem oil illustrated in Figure 1, the resulting acrylate serves as a versatile precursor for preparing resins used in various advanced polymerization techniques. These techniques include Paste Extrusion, Stereolithography (SLA), Digital Light Processing (DLP), Liquid Crystal Display (LCD), Two Photon Polymerization, Continuous Liquid Interface Production (CLIP), and Volumetric 3D printing. The acrylate can be cured or solidified using light sources such as lasers or ultraviolet (UV) light.

In the next step, the resin is formulated by mixing the synthesized acrylate of epoxidized neem oil with appropriate photoinitiators, including Irgacure 819 and Curcumin, in specific amounts. This mixing process occurs at room temperature, utilizing mechanical or magnetic stirring to ensure uniform distribution of the components.

Also, the added photoinitiators play a crucial role: Irgacure 819, a commercial photoinitiator, has a broad UV absorption range and is designed for initiating free radical polymerization under UV light. It efficiently absorbs UV light at wavelengths up to 420 nm, making it suitable for deep curing applications. In contrast, Curcumin, a naturally derived photoinitiator from turmeric, absorbs UV light in the 300-500 nm range and promotes free radical generation upon activation, aligning with sustainable material development practices.

Furthermore, the procedure involves stirring the mixture of acrylate of epoxidized neem oil and photoinitiators for a total duration of approximately 2 hours to ensure thorough mixing. Ultrasonic stirring is intermittently applied for less than 2 minutes at intervals during the mixing process, providing enhanced dispersion and uniform integration of the photoinitiators into the resin matrix. This intermittent ultrasonic stirring is essential to prevent localized overheating and ensure the uniformity of the mixture.

Present invention discloses experimental data of steps involved in the process of producing 3D printable resins are as follow: In epoxidation process, 50 grams of neem oil, characterized by an iodine value of 83.92, is dissolved in 50 milliliters of dichloromethane (CH_2Cl_2). The resulting solution is stirred continuously through magnetic stirrer to ensure uniform dissolution of the neem oil in the solvent. Subsequently, 750 milligrams of methyltrioxorhenium (MTO) are added in 40 mL of 30% hydrogen peroxide (H_2O_2) and the resultant mixture is added drop wise to the reaction mixture under constant vigorous stirring at room temperature to facilitate the epoxidation reaction. After this, the reaction is allowed to run further for 2 hours. After the completion of the reaction, a solution of sodium bisulfite is added to the reaction mixture and stirring is continued for an additional 20 minutes to ensure complete neutralization of hydrogen peroxide. The reaction mixture is then subjected to phase separation, with the organic phase containing the epoxidized neem oil being isolated. The organic phase is washed with a saturated sodium chloride (NaCl) solution to remove any water-soluble impurities. The washed organic phase is then passed through anhydrous magnesium sulfate ($MgSO_4$) to further remove traces of moisture. Finally, the epoxidized neem oil is dried under vacuum to obtain the purified product. This method ensures the efficient conversion of double bonds to epoxy groups while maintaining the integrity of the neem oil's structural properties. The FTIR and NMR spectra (1H NMR and 13C NMR), presented in Figure 4 and Figure 5 respectively, confirm the presence of epoxide groups in the epoxidized neem oil.

Expanding the above present invention experimental data: The Acrylation Process: epoxidized neem oil through a controlled reaction with acrylic acid. Initially, 40 grams of epoxidized neem oil is combined with 12 milliliters of acrylic acid in a round-bottom flask and stirred at 80°C for 20 minutes. To this mixture, 3.2 grams of triethylamine is added as a catalyst, and the reaction is stirred for an additional hour at 85 °C. Subsequently, an additional 8 milliliters of acrylic acid are introduced, and the reaction continues at 85 °C for 14 hours. Upon completion, the reaction mixture is dissolved in petroleum ether and washed sequentially with sodium carbonate and sodium chloride solutions to remove impurities. The product is then dried over magnesium sulfate and subjected to vacuum drying to yield the acrylated neem oil. The FTIR and NMR spectra (1H NMR and 13C NMR), presented in Figure 4 and Figure 5 respectively, confirm the presence of acrylate groups in the acrylate of epoxidized neem oil.

Yet another embodiment of the present invention describes a neem oil-based acrylate resin suitable for Vat Photo-polymerization technique. The process begins with the epoxidation of neem oil involving methyltrioxorhenium (MTO), dichloromethane (CH_2Cl_2), and hydrogen peroxide (H_2O_2) at room temperature. This is followed by acrylation with acrylic acid in presence of catalyst triethylamine. The resulting acrylate is then formulated into a resin by incorporating photoinitiators. Specifically, the photoinitiators Irgacure 819 (Bis(2,4,6 trimethylbenzoyl)-phenylphosphine oxide) and Curcumin (1,7-bis(4-hydroxy-3 methoxyphenyl)-1,6-heptadiene-3,5-dione) are added to make resin suitable for 3D printing. The UV-curable resin shown in Figure 3.

The present invention further describes the formation of a resin by mixing the acrylated neem or vegetable oil with photoinitiators. Specifically, the photoinitiators utilized are Irgacure 819 (Bis(2,4,6-trimethylbenzoyl)-phenylphosphine oxide) and Curcumin (1,7-bis(4-hydroxy-3-methoxyphenyl)-1,6-heptadiene-3,5-dione), which are combined to create three distinct resin formulations. Each resin mixture is stirred at room temperature for 2 hours. During this time, periodic ultrasound treatment is applied to promote uniform dispersion of photoinitiators within resin matrix. The specific compositions of the three resin formulations are detailed in Table 1:

Resin	Neem Oil Acrylate	Irgacure 819 (%)	Curcumin (%)
Resin 1	Yes	1.06	0
Resin 2	Yes	0.53	1.34
Resin 3	Yes	0	2.56

Note: Each formulation is designed to optimize the properties of the resin for Vat Photo polymerization technique, ensuring the versatility and functionality of the final product.
Additional embodiment of the present invention describing 3D printing of acrylate of epoxidized neem oil. After the acrylation, the acrylated neem oil is combined with photoinitiators to prepare a resin suitable for photopolymerization. In the context of the resin formulation for 3D printing applications, specifically in Vat Photopolymerization technique, the prepared resin is exposed to ultraviolet (UV) light. Upon exposure, the photoinitiators within the resin absorb the UV light, triggering a free radical polymerization reaction. This reaction causes the acrylate molecules in the resin to undergo rapid cross-linking, resulting in the formation of a solid polymer network. The polymerization occurs in a layer-by-layer manner, allowing for the precise construction of three-dimensional structures as dictated by the Vat Photopolymerization machine.

Moreover, extending above embodiment of the present invention describing steps to achieving the final 3D printed product. The conversion of neem-oil into acrylates through epoxidation and acrylation is necessary before it can be used as a resin Vat Photo-polymerization technique. Accordingly, photoinitiators must be carefully selected to match the wavelengths of light used in the printing process, ensuring effective polymerization.

In the final embodiment of the present invention, 3D printing of the prepared resin formulations is conducted utilizing an any cubic Photon D2 DLP 3D printer equipped with a 405 nm LED light source. The printing process is performed at room temperature, with a layer thickness of 90 µm. Each layer is exposed for duration of 20 seconds at a light intensity of 25 m W/cm² to initiate the photo-polymerization of the resin. Upon completion of the printing process, excess resin is drained from the printed parts and the platform. The building platform is subsequently removed, and the printed parts are carefully detached. These parts are then subjected to a cleaning procedure, which involves washing with water to remove any residual uncured resin. After cleaning, the parts undergo a final curing step in a UV chamber for 20 minutes to ensure complete polymerization and to enhance the mechanical properties of the printed objects. The parameters detailed herein, such as exposure time, intensity, and layer thickness, are optimized for the described resin formulations and the specified 3D printing system. However, it should be noted that these parameters may vary depending on the specific vat photo-polymerization technique employed, the brand and model of the 3D printer, the type of resin used, and environmental factors.

Continuing the above embodiment of the present invention, the neat acrylate resin derived from neem oil, which includes photoinitiators for UV hardening during vat photo-polymerization, can be enhanced by adding various materials to improve versatility of neem oil-derived acrylate resins. Given below modifications can enhance mechanical, rheological, and thermal characteristics, as well as introduce functionalities like shape memory effects, depending on the application.

First enhancements include incorporating natural fiber reinforcements, carbon nanotubes, graphene, silica nanoparticles, metallic particles, and nanoclays to create reinforced composites. Hybrid resins can also be developed by blending neem oil acrylates with other resin systems such as acrylate of epoxidized oil, urethane acrylates, silicone acrylates, or polyester acrylates, which can improve flexibility, toughness, thermal stability, and chemical resistance.
Another enhancement Fillers like calcium carbonate, titanium dioxide, zinc oxide, ferrous oxide, alumina, hydroxyapatite, silicon carbide, carbon black, boron nitride, zirconia, glass fibers etc. can be added to create composite resin formulations that enhance the overall properties of the final product. The viscosity of the neem oil-based resin can be adjusted using reactive diluents such as methacrylic acid (MAA), tetrahydrofurfuryl acrylate (THFA), or polyethylene glycol diacrylate (PEGDA).

Yet another enhancement bioactive fillers like chitosan, gelatin, lignin, keratin, algae, corn starch, collagen, etc. can be included to enhance biocompatibility and functionality, making the resin suitable for biomedical or tissue engineering uses. This embodiment offers a flexible platform for tailoring neem oil-derived acrylate resins for specific applications through the addition of various composites, fillers, and modifiers, thereby expanding their potential in vat photo-polymerization and other additive manufacturing techniques.

In recent decades, there has been significant interest in biodegradable, biocompatible and bio-based polymers due to growing environmental concerns surrounding the accumulation of plastic waste and the substantial carbon footprint associated with fossil-based materials. The European Union (EU) has recognized biobased polymers as a sustainable alternative to synthetic polymers, aiming to address the limitations of finite fossil resources, promote a healthier environment, and mitigate climate change impacts. Consequently, research communities have been actively exploring the production and application of bioplastics, focusing on technological advancements, environmental considerations, and sustainability implications. As a result, the development of new bio-based materials for 3D printing not only holds promising prospects for the industry but also contributes to the broader goal of a more sustainable environment.

Yet another embodiment of the present invention, neem oil-based acrylate resins, when utilized in 3D printing applications, offer a wide range of industrial and commercial possibilities. These include pharmaceutical applications such as the creation of patches for wound healing. In biomedical applications, neem oil-based resins can be employed for fabricating bio-sensors, drug delivery scaffolds, and tissue engineering constructs, owing to their biodegradability, biocompatibility and bioactivity. Furthermore, these resins can be suited for dental implants and prosthetics, as well as bioelectronics, including wearable electronics and implantable devices. Sustainable packaging solutions, including biodegradable and active antimicrobial packaging, are also feasible. In addition, neem oil-based resins can be used for 3D printing consumer goods, including custom wearables and eco-friendly utensils. These applications leverage the resin's mechanical properties, sustainability, and versatility, making it a promising material in advanced manufacturing technologies.

The projected growth of the global Additive Manufacturing materials market is anticipated to surpass $30 billion over the next ten years. This significant expansion is likely to trigger a substantial need for innovative materials in 3D printing to replace conventional plastics with environmentally friendly and sustainable options.

The present disclosure should not be construed to be limited to the configuration of the method as described herein only. Various steps and sequence of the method are possible which shall also lie within the scope of the present disclosure.

The foregoing descriptions of specific embodiments of the present disclosure have been presented for purposes of illustration and description. They are not intended to be exhaustive or to limit the present disclosure to the precise forms disclosed, and obviously many modifications and variations are possible in light of the above teaching. The embodiments were chosen and described in order to best explain the principles of the present disclosure and its practical application, and to thereby enable others skilled in the art to best utilize the present disclosure and various embodiments with various modifications as are suited to the particular use contemplated. It is understood that various omissions and substitutions of equivalents are contemplated as circumstances may suggest or render expedient, but such omissions and substitutions are intended to cover the application or implementation without departing from the spirit or scope of the present disclosure.

CLAIM

I/we claim,

1. A method for additive manufacturing of a liquid and or resin derived from neem oil, comprising:

   an epoxidizing step, wherein neem oil is reacted with oxidizing agents like hydrogen peroxide in the presence of catalyst like methyltrioxorhenium (MTO) to introduce epoxide functional groups;

   an acrylation step, wherein the epoxidized neem oil is reacted with acrylic acid to produce acrylated neem oil;

   a curing step, wherein the acrylated neem oil is mixed with photoinitiators and exposed to a light source like a UV light, causes polymerization and or free radical polymerization to occur during the 3D printing process.

2. A method for additive manufacturing of a 3D printable polymer resin derived from organic neem oil, comprising:

   a resin suitable for 3D printing, wherein the resin specifically formulated to be used in additive manufacturing processes such as (Vat photopolymerization and Paste Extrusion) such as Stereolithography (SLA), Digital Light Processing (DLP), Liquid Crystal Display (LCD), Two-Photon Polymerization, Continuous Liquid Interface Production (CLIP), Continuous Digital Light Processing (cDLP), Hot Lithography, Volumetric 3D printing, UV light based paste extrusion and any other machine or equipment or arrangement which can use any light source including laser, ultraviolet (UV) light of appropriate wavelength to cure or solidify or polymerize the resin and form final products.

3. The method of claim 1, wherein the photoinitiators are chosen based on their compatibility with the acrylated neem oil and the specific wavelengths of light used in the 3D printing process.

4. The method of claim 1, wherein the resulting 3D printable resin is suitable for applications in pharmaceutical, biomedical, medical, oral healthcare, and packaging fields, etc.

RASINTELLECT
Your Trusted Partner in Intellectual Property

5. The method of claim 1, wherein the neem oil-derived resin exhibits biocompatibility and biodegradability, making it an environmentally friendly alternative to conventional petroleum-derived resins or materials that are obtained from multiple synthetic routes.

Dated this _DD_ day of month 20_YY_

Signature of the Applicant/Patent Agent

Name of the Applicant/Patent Agent

Patent Agent Number

AGENT FOR THE APPLICANT(S)

RAS INTELLECT
Your Trusted Partner in Intellectual Property

ABSTRACT

METHOD FOR ADDITIVE MANUFACTURING OF ORGANIC NEEM OIL-BASED RESIN

The invention introduces a novel method for additive manufacturing of a 3D printable polymer resin derived from organic neem oil. This process involves a two-step procedure where neem oil is first epoxidized using a biphasic system with methyltrioxorhenium (MTO) and hydrogen peroxide (H_2O_2) at room temperature, followed by acrylation with acrylic acid. The resulting acrylate is then converted into a resin by adding photoinitiators, specifically Irgacure 819 (Bis (2,4,6-trimethylbenzoyl)-phenylphosphine oxide) and Curcumin (1,7-bis(4-hydroxy-3-methoxyphenyl)-1,6-heptadiene-3,5-dione), making it suitable for digital light processing (DLP) 3D printing. This method eliminates the need for toxic chemicals, aligns with sustainability goals, and enhances environmental safety. The neem oil-based resin is versatile for use in pharmaceutical, medical, biomedical, oral healthcare, and packaging sectors, leveraging neem oil's medicinal properties, and offering a sustainable, non-hazardous, non-toxic alternative to the materials which are petroleum based and are obtained from synthetic routes.
Fig. 1

Dated this _DD_ day of month 20_YY_

Signature of the Applicant/Patent Agent
Name of the Applicant/Patent Agent
Patent Agent Number
AGENT FOR THE APPLICANT(S)

DRAWINGS

Applicant Name: ABC

Total No. of Pages: 05
Page 1 of 05

FIGURE 1

Dated this _DD_ day of month 20_YY_

Signature of the Applicant/Patent Agent
Name of the Applicant/Patent Agent
Patent Agent Number
AGENT FOR THE APPLICANT(S)

RAS INTELLECT
Your Trusted Partner in Intellectual Property

DRAWINGS

Applicant Name: ABC

Total No. of Pages: 05
Page 2 of 05

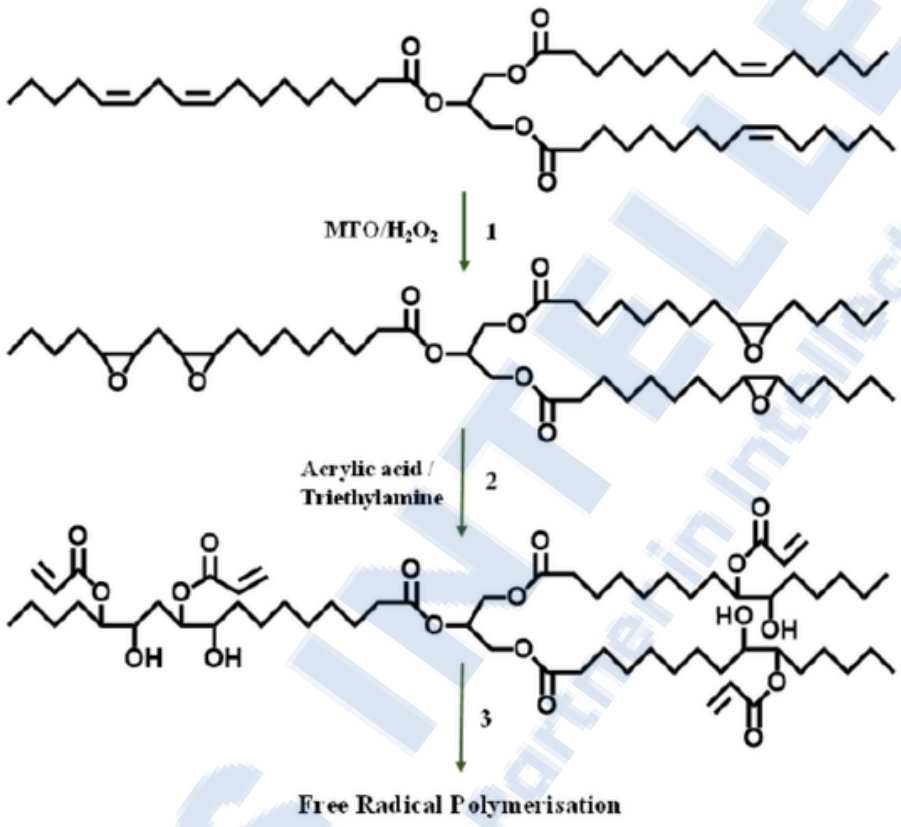

FIGURE 2

Dated this _DD_ day of month 20_YY_

Signature of the Applicant/Patent Agent
Name of the Applicant/Patent Agent
Patent Agent Number
AGENT FOR THE APPLICANT(S)

DRAWINGS

Applicant Name: ABC

Total No. of Pages: 05
Page 3 of 05

FIGURE 3

Dated this _DD_ day of month 20_YY_

Signature of the Applicant/Patent Agent
Name of the Applicant/Patent Agent
Patent Agent Number
AGENT FOR THE APPLICANT(S)

RASMINTELLECT
Your Trusted Partner in Intellectual Property

DRAWINGS

Applicant Name: ABC

Total No. of Pages: 05
Page 4 of 05

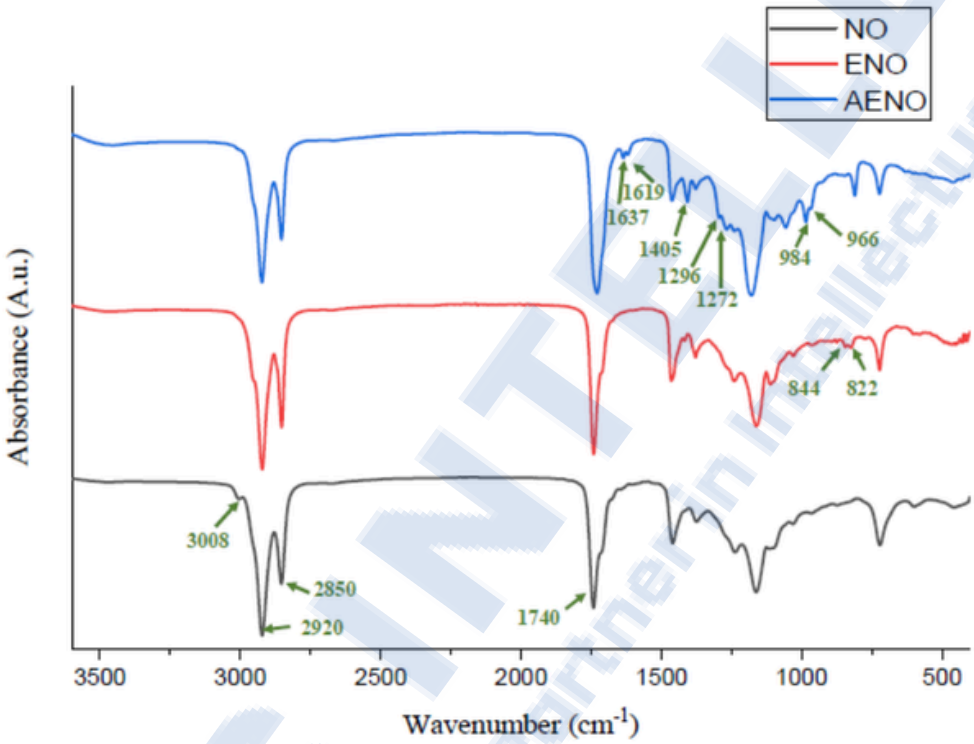

FIGURE 4

Dated this _DD_ day of month 20_YY_

Signature of the Applicant/Patent Agent
Name of the Applicant/Patent Agent
Patent Agent Number
AGENT FOR THE APPLICANT(S)

DRAWINGS

Applicant Name: ABC

Total No. of Pages: 05
Page 5 of 05

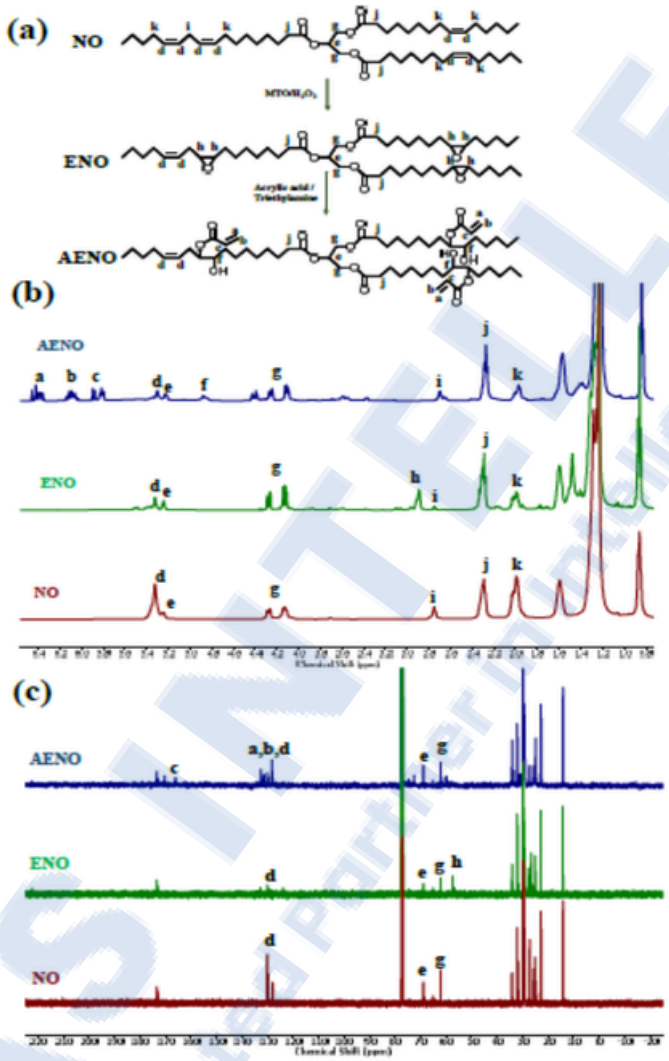

FIGURE 5

Dated this _DD_ day of month 20_YY_

Signature of the Applicant/Patent Agent
Name of the Applicant/Patent Agent
Patent Agent Number
AGENT FOR THE APPLICANT(S)

Chapter 4
DRAFTING A DESIGN APPLICATION

INFORMATION ON HOW TO DRAFT A DESIGN APPLICATION

To draft a design application for submitting it in India through the Indian Patent Office (IPO), one needs to follow a structured process governed by the Designs Act, 2000 and the Designs Rules, 2001. Preparing a representation sheet is the most crucial part and the heart of a design application submission at the IPO. A comprehensive guide prepared according to the Designs Act, 2000 and the Designs Rules, 2001 for preparing a representation sheet for a corresponding design application submission and other relevant details are given below.

- A representation sheet containing all the drawings and/or photographs of the design application should be prepared on A4 size paper (210 mm X 296.9 mm) with a white background.
- The figure(s) shall be placed in an upright position on the sheet. Each figure shall be designated clearly. To show clearly the design, include all the following different views
  - Perspective view,
  - Front View,
  - Rear View,
  - Top View,
  - Bottom View,
  - Left Side View,
  - Right Side View.
- Include each view in a separate page.
- Identify a name of the design that suits best with the provided design and its proposed use.
- Furnish the name of applicant(s) in top left corner of each page of the representation sheet dedicated to each view of the design.
- Furnish the detail of total number of sheets and consequential sheet number in top right corner of each page of the representation sheet dedicated to each view of the design.
- Furnish the information of the first submission date of the design in bottom left corner of each page of the representation sheet dedicated to each view of the design.
- If any patent agent is submitting the design application on behalf of the applicant, then provide the signature, name of the Patent Agent along with his/her valid patent Agent Number in bottom right corner of each page of the representation sheet dedicated to each view of the design.
- If, instead of a patent agent, an applicant is submitting the design application, then provide the signature, name of the applicant in bottom right corner of each page of the representation sheet dedicated to each view of the design.
- Identify the best suitable design class (out of 32 class) and sub-class of the design application from the third schedule of the Designs Rules, 2001, prepared based on Locarno Classification. This information will be needed for mandatory filling of the form 1 for design application submission.
- Draft the statement of novelty, having a clear description about the novelty of the design, highlighting how the design is new and original compared to the existed designs and able to define the scope of the protection firmly.
- If design is to be applied to a set, the representation shall depict various arrangements in which the design is to be applied to articles in the set.
- A statement of novelty and disclaimer in respect of mechanical action, trademark, word, letter, numerals should be endorsed on each representation sheet. For specimen statements please see the next page.

ANNEXURE-II (THE DESIGN MANUAL)
SPECIMEN NOVELTY STATEMENTS & DISCLAIMERS IN REPRESENTATION SHEET

Novelty Statements	a. The novelty resides in the shape of the ash-tray as illustrated. b. The novelty resides in the shape or configuration in the bookshelf as illustrated. c. The novelty resides in the groove (A) and projection (B) as illustrated. d. The novelty resides in the ornamental surface pattern of the football as illustrated. e. Novelty is claimed for the floral ornamentation of tea-pot as illustrated. **Note:** There is no need to highlight or pin-point any portion of the representation as novel, as novelty of the design resides in the article taken as a whole.
Disclaimers	a. No claim is made by virtue of this registration of respect of any mechanical or other action of any mechanism whether or in respect of any mode or principle of construction of the article. b. No claim is made by virtue of this registration to any right to the exclusive use of trade marks, words or letters and numerals appearing in the design of the article. c. No claim is made by virtue of this registration to any right to the exclusive use of colour or colour combination appearing in the design of the article. d. No claim is made by virtue of this registration to any right to the exclusive use of any extraneous matter like xxxxxxxxx etc. appearing in the representation sheets.

- Representation, which consists of a repeating surface pattern, shall show the complete pattern, and a sufficient portion of the repeating pattern in length and width, and shall not be less than 15 cm X 10 cm in size.
- No descriptive matter or matter denoting the components by reference letters/numerals shall be included.
- No sectional views shall be incorporated in the representation sheet.
- Dimensions or engineering symbols etc. shall not be used in the representation sheet. The representation is not to be regarded as engineering drawing of the article. The relevant parameter is the shape and not the size of the article.
- No extraneous matter or background shall appear in the representation sheet. A background is considered neutral as long as the design is clearly visible in it.
- Dotted lines may be used in representation to indicate those elements of the article for which no protection is sought. Dotted lines identify elements which are not part of the claimed design. In such a case, features of design for which protection is sought must be shown in solid lines in the drawing. For instance, an ornamentation or surface pattern on an article can be registered. In such a case, the representation shall contain a solid line drawing for the claimed ornamentation or surface pattern, and dotted line for rest of the article.
- When color combination is the essence of a design as applied to an article, the same shall be clearly depicted in the representation.

- Coloring may be used, on a black and white drawing, to highlight only those features of the design for which protection is sought. In such cases, it shall be clearly indicated in the novelty statement that the claim is restricted only to the portions depicted by coloring and the colors so given are not part of the design.
- Representations shall ordinarily be prepared in one format e.g., drawings, graphics or photographs etc. However, for better clarity, if the applicant so desires, a representation may be given in different formats.

RAS INTELLECT
Your Trusted Partner in Intellectual Property

Chapter 5
EXAMPLES OF REPRESENTATION SHEETS

Some examples of representation sheets crucial for a design application submission published by the Indian Patent Office (IPO), are given below for clear and better understanding of the structure of a representation sheet, the heart of a design application.

REPRESENTATION SHEET (starts below)

Applicant Name: ABC
Application No.: 12345

No. of Sheets : 7
Sheet No.: 1

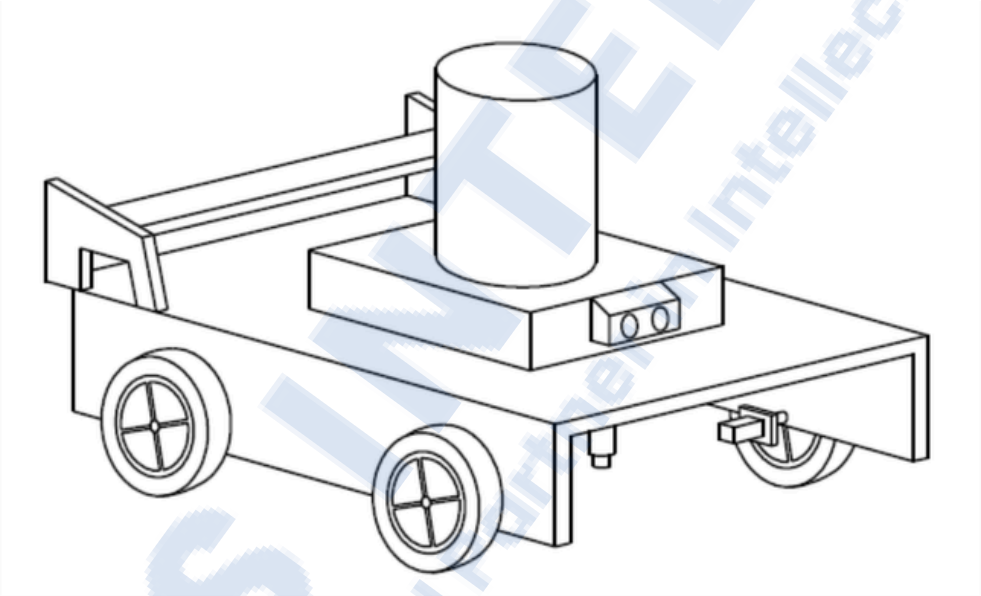

Perspective View

The Novelty resides in the Shape and Configuration of the "Spraying Robot (Title/Name of the Design)" as illustrated.

No claim is made by virtue of this registration in respect of any mechanical action or other action of the mechanism whatever or in respect of any mode or principle of construction of the article.

No claim is made by virtue of this registration to any right to use as a trademark of what is shown in the representations.

No claim is made by virtue of this registration to the exclusive use of the words, letters, numerals etc. appearing in the design including background.

Dated this _DD_ day of month 20_YY_

Signature of the Applicant/Patent Agent
Name of the Applicant/Patent Agent
Patent Agent Number
AGENT FOR THE APPLICANT(S)

Applicant Name: ABC
Application No.: 12345

No. of Sheets : 7
Sheet No.: 2

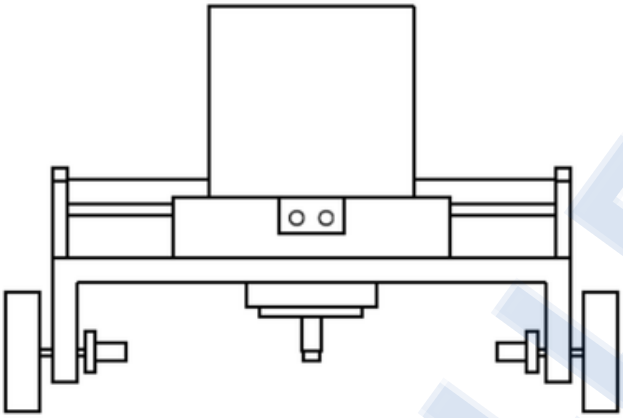

Front View

The Novelty resides in the Shape and Configuration of the ˝Spraying Robot (Title/Name of the Design)˝ as illustrated.

No claim is made by virtue of this registration in respect of any mechanical action or other action of the mechanism whatever or in respect of any mode or principle of construction of the article.

No claim is made by virtue of this registration to any right to use as a trademark of what is shown in the representations.

No claim is made by virtue of this registration to the exclusive use of the words, letters, numerals etc. appearing in the design including background.

Dated this _DD_ day of month 20_YY_

Signature of the Applicant/Patent Agent
Name of the Applicant/Patent Agent
Patent Agent Number
AGENT FOR THE APPLICANT(S)

RASINTELLECT
Your Trusted Partner in Intellectual Property

Applicant Name: ABC
Application No.: 12345

No. of Sheets : 7
Sheet No.: 3

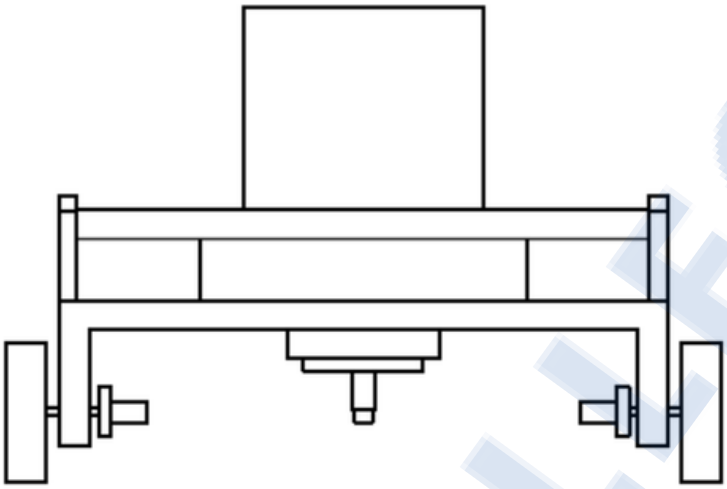

Rear View

The Novelty resides in the Shape and Configuration of the ˝Spraying Robot (Title/Name of the Design)˝ as illustrated.

No claim is made by virtue of this registration in respect of any mechanical action or other action of the mechanism whatever or in respect of any mode or principle of construction of the article.

No claim is made by virtue of this registration to any right to use as a trademark of what is shown in the representations.

No claim is made by virtue of this registration to the exclusive use of the words, letters, numerals etc. appearing in the design including background.

Dated this _DD_ day of month 20_YY_

Signature of the Applicant/Patent Agent
Name of the Applicant/Patent Agent
Patent Agent Number
AGENT FOR THE APPLICANT(S)

RASINTELLECT
Your Trusted Partner in Intellectual Property

Applicant Name: ABC
Application No.: 12345

No. of Sheets : 7
Sheet No.: 4

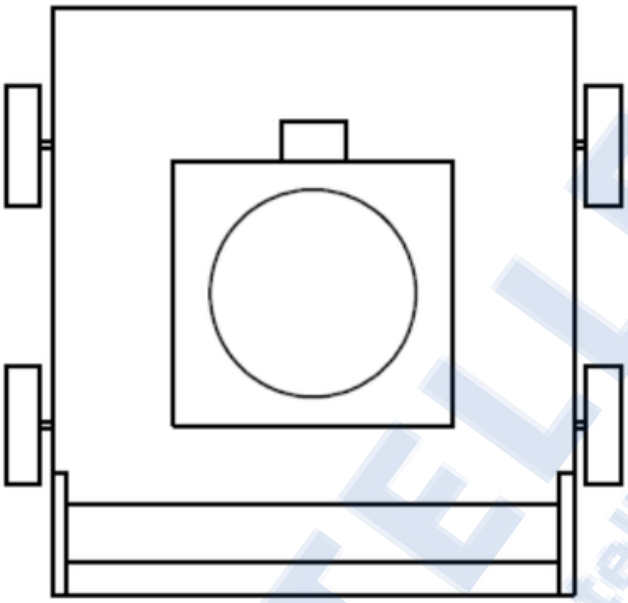

Top View

The Novelty resides in the Shape and Configuration of the ˝Spraying Robot (Title/Name of the Design)˝ as illustrated.

No claim is made by virtue of this registration in respect of any mechanical action or other action of the mechanism whatever or in respect of any mode or principle of construction of the article.

No claim is made by virtue of this registration to any right to use as a trademark of what is shown in the representations.

No claim is made by virtue of this registration to the exclusive use of the words, letters, numerals etc. appearing in the design including background.

Dated this _DD_ day of month 20_YY_

Signature of the Applicant/Patent Agent
Name of the Applicant/Patent Agent
Patent Agent Number
AGENT FOR THE APPLICANT(S)

RASINTELLECT
Your Trusted Partner in Intellectual Property

Applicant Name: ABC
Application No.: 12345

No. of Sheets : 7
Sheet No.: 5

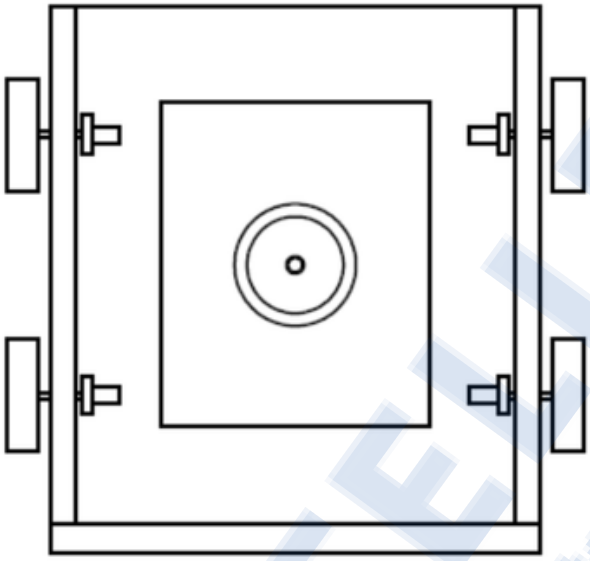

Bottom View

The Novelty resides in the Shape and Configuration of the ˝Spraying Robot (Title/Name of the Design)˝ as illustrated.

No claim is made by virtue of this registration in respect of any mechanical action or other action of the mechanism whatever or in respect of any mode or principle of construction of the article.

No claim is made by virtue of this registration to any right to use as a trademark of what is shown in the representations.

No claim is made by virtue of this registration to the exclusive use of the words, letters, numerals etc. appearing in the design including background.

Dated this _DD_ day of month 20_YY_

Signature of the Applicant/Patent Agent
Name of the Applicant/Patent Agent
Patent Agent Number
AGENT FOR THE APPLICANT(S)

Applicant Name: ABC
Application No.: 12345

No. of Sheets : 7
Sheet No.: 6

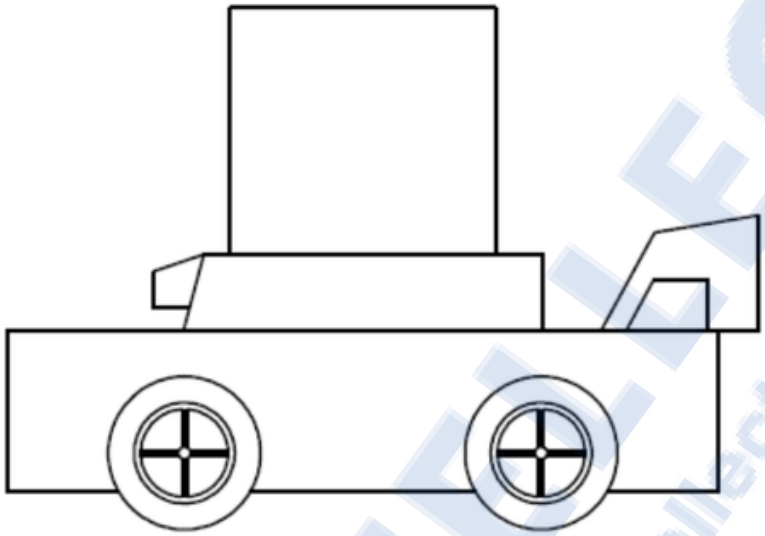

Left Side View

The Novelty resides in the Shape and Configuration of the ˝Spraying Robot (Title/Name of the Design)˝ as illustrated.

No claim is made by virtue of this registration in respect of any mechanical action or other action of the mechanism whatever or in respect of any mode or principle of construction of the article.

No claim is made by virtue of this registration to any right to use as a trademark of what is shown in the representations.

No claim is made by virtue of this registration to the exclusive use of the words, letters, numerals etc. appearing in the design including background.

Dated this _DD_ day of month 20_YY_

Signature of the Applicant/Patent Agent
Name of the Applicant/Patent Agent
Patent Agent Number
AGENT FOR THE APPLICANT(S)

RASINTELLECT
Your Trusted Partner in Intellectual Property

Applicant Name: ABC
Application No.: 12345

No. of Sheets : 7
Sheet No.: 7

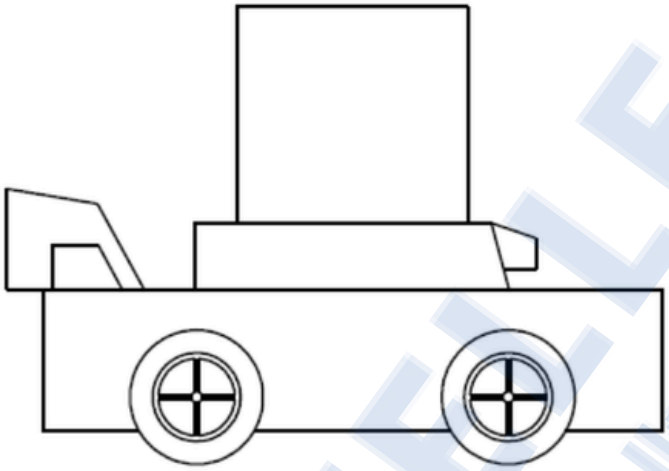

Right Side View

The Novelty resides in the Shape and Configuration of the ˝Spraying Robot (Title/Name of the Design)˝ as illustrated.

No claim is made by virtue of this registration in respect of any mechanical action or other action of the mechanism whatever or in respect of any mode or principle of construction of the article.

No claim is made by virtue of this registration to any right to use as a trademark of what is shown in the representations.

No claim is made by virtue of this registration to the exclusive use of the words, letters, numerals etc. appearing in the design including background.

Dated this _DD_ day of month 20_YY_

Signature of the Applicant/Patent Agent
Name of the Applicant/Patent Agent
Patent Agent Number
AGENT FOR THE APPLICANT(S)

RASINTELLECT
Your Trusted Partner in Intellectual Property

REPRESENTATION SHEET (starts below)

Applicant Name: ABC
Application No.: 12345

No. of Sheets : 7
Sheet No.: 1

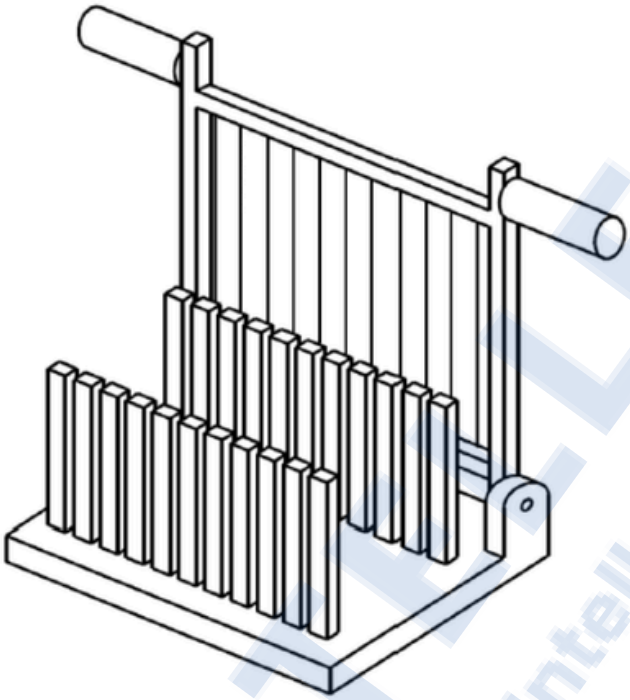

Perspective View

The Novelty resides in the Shape and Configuration of the ˝Bread Slicer (Title/Name of the Design)˝ as illustrated.

No claim is made by virtue of this registration in respect of any mechanical action or other action of the mechanism whatever or in respect of any mode or principle of construction of the article.

No claim is made by virtue of this registration to any right to use as a trademark of what is shown in the representations.

No claim is made by virtue of this registration to the exclusive use of the words, letters, numerals etc. appearing in the design including background.

Dated this _DD_ day of month 20_YY_

Signature of the Applicant/Patent Agent
Name of the Applicant/Patent Agent
Patent Agent Number
AGENT FOR THE APPLICANT(S)

Applicant Name: ABC
Application No.: 12345

No. of Sheets : 7
Sheet No.: 2

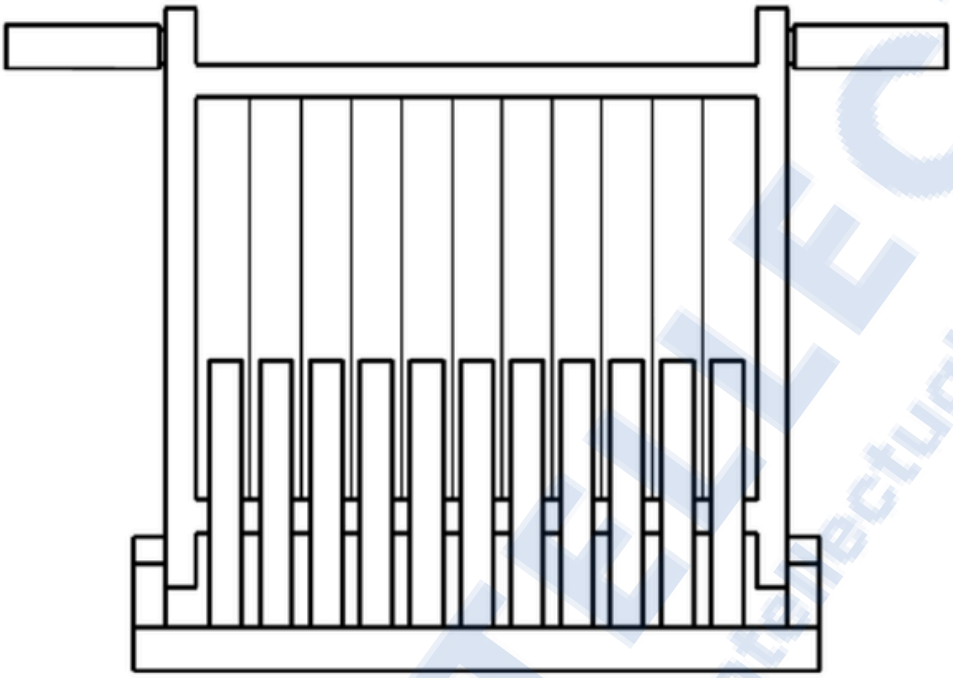

Front View

The Novelty resides in the Shape and Configuration of the ˝Bread Slicer (Title/Name of the Design)˝ as illustrated.

No claim is made by virtue of this registration in respect of any mechanical action or other action of the mechanism whatever or in respect of any mode or principle of construction of the article.

No claim is made by virtue of this registration to any right to use as a trademark of what is shown in the representations.

No claim is made by virtue of this registration to the exclusive use of the words, letters, numerals etc. appearing in the design including background.

Dated this _DD_ day of month 20_YY_

Signature of the Applicant/Patent Agent
Name of the Applicant/Patent Agent
Patent Agent Number
AGENT FOR THE APPLICANT(S)

Applicant Name: ABC
Application No.: 12345

No. of Sheets : 7
Sheet No.: 3

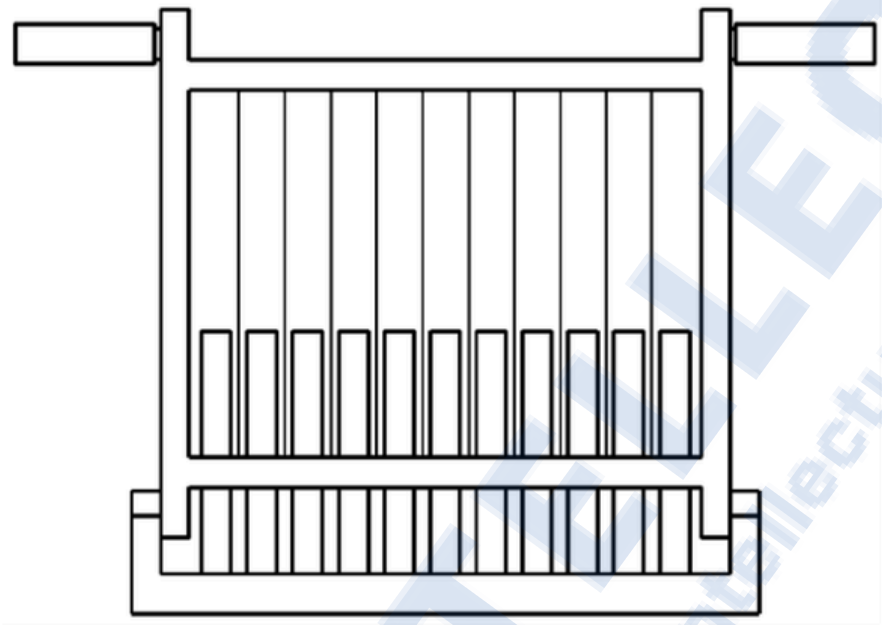

Rear View

The Novelty resides in the Shape and Configuration of the ˝Bread Slicer (Title/Name of the Design)˝ as illustrated.

No claim is made by virtue of this registration in respect of any mechanical action or other action of the mechanism whatever or in respect of any mode or principle of construction of the article.

No claim is made by virtue of this registration to any right to use as a trademark of what is shown in the representations.

No claim is made by virtue of this registration to the exclusive use of the words, letters, numerals etc. appearing in the design including background.

Dated this _DD_ day of month 20_YY_

Signature of the Applicant/Patent Agent
Name of the Applicant/Patent Agent
Patent Agent Number
AGENT FOR THE APPLICANT(S)

Applicant Name: ABC
Application No.: 12345

No. of Sheets : 7
Sheet No.: 4

Top View

The Novelty resides in the Shape and Configuration of the ˝Bread Slicer (Title/Name of the Design)˝ as illustrated.

No claim is made by virtue of this registration in respect of any mechanical action or other action of the mechanism whatever or in respect of any mode or principle of construction of the article.

No claim is made by virtue of this registration to any right to use as a trademark of what is shown in the representations.

No claim is made by virtue of this registration to the exclusive use of the words, letters, numerals etc. appearing in the design including background.

Dated this _DD_ day of month 20_YY_

Signature of the Applicant/Patent Agent
Name of the Applicant/Patent Agent
Patent Agent Number
AGENT FOR THE APPLICANT(S)

Applicant Name: ABC
Application No.: 12345

No. of Sheets : 7
Sheet No.: 5

Bottom View

The Novelty resides in the Shape and Configuration of the ˝Bread Slicer (Title/Name of the Design)˝ as illustrated.

No claim is made by virtue of this registration in respect of any mechanical action or other action of the mechanism whatever or in respect of any mode or principle of construction of the article.

No claim is made by virtue of this registration to any right to use as a trademark of what is shown in the representations.

No claim is made by virtue of this registration to the exclusive use of the words, letters, numerals etc. appearing in the design including background.

Dated this _DD_ day of month 20_YY_

Signature of the Applicant/Patent Agent
Name of the Applicant/Patent Agent
Patent Agent Number
AGENT FOR THE APPLICANT(S)

Applicant Name: ABC
Application No.: 12345

No. of Sheets : 7
Sheet No.: 6

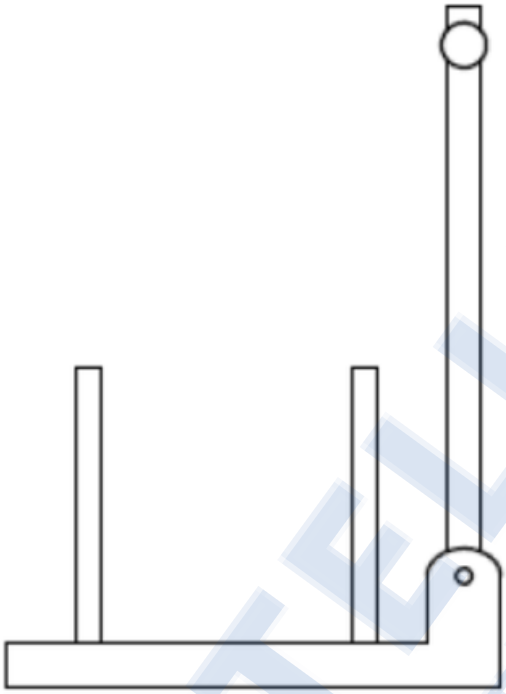

Left Side View

The Novelty resides in the Shape and Configuration of the ˝Bread Slicer (Title/Name of the Design)˝ as illustrated.

No claim is made by virtue of this registration in respect of any mechanical action or other action of the mechanism whatever or in respect of any mode or principle of construction of the article.

No claim is made by virtue of this registration to any right to use as a trademark of what is shown in the representations.

No claim is made by virtue of this registration to the exclusive use of the words, letters, numerals etc. appearing in the design including background.

Dated this _DD_ day of month 20_YY_

Signature of the Applicant/Patent Agent
Name of the Applicant/Patent Agent
Patent Agent Number
AGENT FOR THE APPLICANT(S)

RASINTELLECT
Your Trusted Partner in Intellectual Property

Applicant Name: ABC
Application No.: 12345

No. of Sheets : 7
Sheet No.: 7

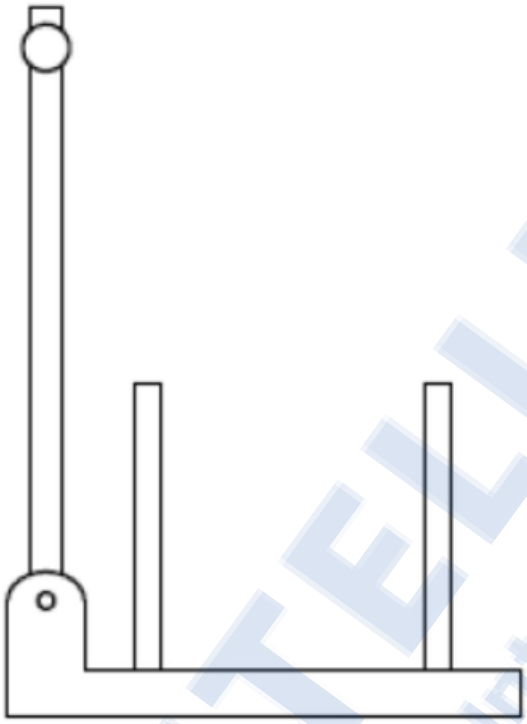

Right Side View

The Novelty resides in the Shape and Configuration of the ˝Bread Slicer (Title/Name of the Design)˝ as illustrated.

No claim is made by virtue of this registration in respect of any mechanical action or other action of the mechanism whatever or in respect of any mode or principle of construction of the article.

No claim is made by virtue of this registration to any right to use as a trademark of what is shown in the representations.

No claim is made by virtue of this registration to the exclusive use of the words, letters, numerals etc. appearing in the design including background.

Dated this _DD_ day of month 20_YY_

Signature of the Applicant/Patent Agent
Name of the Applicant/Patent Agent
Patent Agent Number
AGENT FOR THE APPLICANT(S)

RASINTELLECT
Your Trusted Partner in Intellectual Property

Chapter 6

TEST YOUR KNOWLEDGE

PATENT SPECIFICATION

1. A client meets you and provides technical information regarding his invention. Draft a complete specification with at least two claims and a title for anyone of the following descriptions, for filing in the Indian Patent office. While drafting the complete application, specify an appropriate title, abstract summarizing the invention, description explaining its details, claims defining its protectable aspects, drawings or figures or tables for visual representation.

Also write a justification for the drafted claims explaining how it protects the desired scope of the invention.

Problem Statement: In many regions, air transport accessibility is hindered by the lack of adequate runway length. Remote areas or developing regions often have airstrips or airports with limited runway distances, restricting the types of aircraft that can operate effectively.

Challenges: Communities and regions with shorter runways struggle to access reliable air transport services.

Economic Impact: Limited access to air transportation affects trade, tourism, and economic development in these regions.

Safety Concerns: Short runways pose safety challenges for conventional aircraft during takeoff and landing.

Solution offered: The solution involves integrating rocket technology into aircraft to enable safe takeoff and landing on short runways. This approach enhances the aircraft's capabilities, addressing the challenges posed by limited runway lengths.

Key Components: Rockets are incorporated into the aircraft to provide additional thrust during takeoff, reducing the ground roll required for liftoff.

Precision Landing: Rockets assist in decelerating the aircraft during landing, reducing the necessary landing distance for a safe touchdown.

Adaptive Technology: The system includes variable thrust control and advanced avionics for precise and adaptable operation based on runway conditions.

Impact and Benefits: Improved air transport accessibility for remote areas, fostering economic growth and connectivity.

Operational Efficiency: Airlines can utilize smaller runways, optimizing routes and flight schedules.

Safety Improvement: Enhanced capabilities minimize risks associated with operating on short runways.

Integrating rockets into aircraft operations for short runway capabilities represents an innovative solution to improve air transport accessibility and operational flexibility in regions constrained by limited runway lengths.

2. A client meets you and provides technical information regarding his invention. Draft a complete specification with at least two claims and a title for anyone of the following descriptions, for filing in the Indian Patent office.

While preparing the complete specification, no need to draw the figures. However, you may refer to the figures in the specification as fig. 1, fig. 2 etc.

This invention relates to a composition and oral pharmaceutical dosage form for selective delivery of drugs to the colon. More particularly, the invention relates to compositions and oral pharmaceutical dosage forms for release of biologically active ingredients in the colon while avoiding or minimizing release into the upper gastrointestinal tract, such the stomach and small intestine.

Numerous drug entities based on oral delivery have been successfully commercialized, but many others are not readily available by oral administration, which are incompatible with the physical and/or chemical environments of the upper GI tract and/or demonstrate poor uptake in the upper GI tract. Due to the lack of digestive enzymes, colon is considered a suitable site for the absorption of various drugs. However, colon drug delivery is hardly achieved in that the oral dosage form should pass through the stomach and small intestine, where many drugs are deactivated by their digestive materials. Ideally, a colon specific drug delivery system is designed such that it remains intact in stomach and small intestine but releases encapsulated drugs only in colon. CSDS system is useful in administering a drug that is an irritant to the upper GI tract, such as non-steroidal anti-inflammatory agents, or drugs that are degraded by gastric juice or an enzyme present in the upper GI tract, such as peptide or protein. Further, the colonic drug delivery system allows local, direct treatment of colonic disease, e.g., ulcerative colitis, Crohn's disease, or colon cancer, thus reducing the dosage of the drugs and minimizing undesirable or harmful side effects. Similarly, colonic drug delivery is useful for administering drugs, e.g., nonsteroidal anti-inflammatory drugs (NSAIDS), which are irritants to the mucosa of the upper gastrointestinal tract such as the stomach or small intestine. Recently, it is believed that colonic drug delivery systems maintain the efficacy of drugs for a longer time and increase the bioavailability of the drugs as compared to other oral routes of administration. As the colon has a longer retention time, drug absorption is prolonged, and total bioavailability is increased.

The present invention comprises a mixture, prepared at a pH of about 7 or above, without use of a cross-linking agent, of a galactomannan and a polysaccharide, preferably pectin, selected from the group consisting of pectin, derivatives of pectin, and mixtures thereof. The composition forms a strong elastic gel that is not appreciably dissolved or disintegrated in gastric or intestinal fluids, thus protecting drugs from being released in the upper GI tract. When the composition arrives in the colon, the composition is easily degraded by synergic effect of pectinolytic enzymes and glactomannanase, thus releasing drugs rapidly in the colon. The ratio of the two polysaccharides determines the rate of enzymatic degradation of the composition and disintegration of dosage form through GI tract, which in turn enables the composition to release the drug site specifically in the colon.

The pharmaceutical composition of the present invention comprises an effective amount of a drug, diagnostic reagent, or mixture thereof, and a polysaccharide mixture formed in an aqueous medium at a pH of about 7 or above of (a) a polysaccharide selected from the group consisting of pectin, derivatives of pectin, and mixture thereof, and (b) galactomannan, without use of a cross-linking agent. The drug is an antimigraine, anti-nauseant, antineoplastic, anti-parkinsonism, antipruritic, antipsychotic, antipyretic, antispasmodic, anticholinergic, sympathomimetic, xanthine derivative, potassium channel blocker, calcium channel blocker, beta-blocker, alpha-blocker or other drugs.

The weight ratio of polysaccharide: galactomannan is from about 50:50 to about 99.9:0.1 in the composition. The weight ratio of polysaccharide: galactomannan is from about 66.6:33.4 to about 90:10.
The drug as used in the pharmaceutical composition may be selected from the group consisting of mesalamine, balsalazide, olsalazine, ibuprofen, prednisolone, dexamethasone, budesonide, beclomethasone, flucticasone, tioxocortal, hydrocortisone, metronidazole, cyclosporin, methotrexate, domperidone, 5-fluorouracil, bisacodyl, senna, insulin, vasopressin, growth hormones, colony stimulating factors, calcitonin, immunoglobulin, glibenclimide, diltiazem, verapamil, nifedipine, captopril, benazepril, enalapril, theophylline, naxopren, diclofenac, acyclovir, omeprazole, lovastatin, alendronate, desmopressin, metformin, metoprolol, cisapride, tacrine, mixtures thereof and probiotics.
In the pharmaceutical composition of the invention the drug, diagnostic reagent, of mixture thereof may be used in the form of a tablet, a pill, a seed, or a capsule formulation and may be coated coated with said polysaccharide mixture to form a coated formulation. The coating may be 1-100 mg/cm2 in size. In a preferred embodiment the coating is 1-40 mg/cm2 in size.

The drug, diagnostic reagent, or mixture thereof is encapsulated with a shell composed of said polysaccharide mixture to form a hard capsule formulation. The said shell is 1-100 μm in thickness. Most desired thickness of the shell is 1-40 μm in thickness.

A method for preparing the colon selective pharmaceutical composition for oral delivery of a drug, diagnostic reagent, or mixture thereof comprising forming a polysaccharide mixture in an aqueous medium at a pH of about 7 or above of (a) a polysaccharide selected from the group consisting of pectin, derivatives of pectin, and mixtures thereof, and (b) galactomannan, without use of a crosslinking agent, and contacting the polysaccharide mixture with a drug, diagnostic regent or mixture thereof.

3. A client meets you and provides technical information regarding his invention. Draft a complete specification with at least two claims and a title for anyone of the following descriptions, for tiling in the Indian Patent Office.

While preparing the complete specification, do not redraw the figures. However, you may refer to the ligures in the specification as Fig. 1, Fig. 2 and Fig. 3 etc.

Diclofenac (2-(2-[2.6-diehlorophenylamino]phenyl)acetic acid) is one of the most widely used non-steroidal anti-inflammatory drugs due to its marked pharmacological activity. Thiocolchicoside, also known as 3-demethyl-thioeolehieine glucoside, is a glucoside extracted from the seeds of Colchicum autumnale, which possesses a muscle-relaxant. anti-inflammatory. analgesic and anaesthetic action. The prior art I demonstrates that diclofenac is a substance which is relatively unstable in solution. and that the liquid formulations of said substance therefore require the presence of a stabilizing agent.

The patent prior art 2 discloses stable aqueous solutions of diclofenac containing a mixture of propylene glycol and polyethylene glycol. The chemical stability of said solutions is obtained by adding a reducing agent which can be a sulphite, such as sodium bisulphite, cysteine and/or cysteine hydrochloride, acetylcysteine and/or acetylcysteine hydrochloride, or a thiosulphate. Their chemical stability is further improved by the presence of lidocaine in addition to the reducing agent. When preparing a liquid composition containing diclofenac and Thiocolchicoside. the inventors of the present application have found that it is necessary to overcome a number of technological difficulties. the most important requirement being to prevent the degradation of one or both of the active ingredients when formulated in a single unit dose solution. The antioxidant most widely used to stabilize diclofenac in liquid solutions is sodium bisulphite. There are numerous formulations on the market containing this antioxidant. Other antioxidants used arc cysteine, acetylcysteine and reduced glutathione. Thiocolchicoside also presents stability problems in solution.

The chemical and physical compatibility of Thiocolchicoside with other injectable medicaments frequently combined with it, including anti-inflammatory, is described in prior art 3. The authors of the present invention have found that the addition of Thiocolchicoside to a formulation containing diclofenac makes the use of the above-mentioned antioxidants problematic, if not impossible, as their presence in the solution causes significant degradation of Thiocolchicoside and diclofenac under ambient and supra-ambient storage conditions (40°C). As the number of antioxidants suitable for parenteral/injectable use is limited, the impossibility of using said stabilizing agents makes it very complex to obtain formulations which arc potentially stable under the conditions required by the health authorities when the product is registered. Tert-butyl-4-hydroxyanisole, also known as butylated hydroxyanisole or BHA, is an antioxidant widely used in the food and pharmaceutical industry. It is used in fats and oils, foods containing fats, essential oils, and food packaging materials. BHA is a mixture of two isomers: 2-tertbutyl-4-hydroxyanisole (2-BHA) and 3-tert-butyl-4-hydroxyanisole (3-BHA).

The present invention solves the technical problem of the instability of liquid formulations containing a combination of diclofenac and Thiocolchicoside. Accordingly, the composition of the invention contains tert-butyl 4-hydroxyanisole (BHA) as antioxidant. Diclofenac is preferably present in the composition as sodium salt. The composition of the invention can optionally also contain excipients suitable for pharmaceutical use, such as mannitol and sorbitol, and can also contain a local anaesthetic, such as lidocaine. The composition according to the invention can also contain solubilizing agents, chelating agents, buffering agents or pH correctors, such as sodium or potassium hydroxide, sodium bicarbonate, tromethamine, mono ethanolamine or other organic bases. In one embodiment of the invention the composition takes the form of an aqueous solution consisting of a mixture of water and propylene glycol. In a preferred embodiment of the invention the composition takes the form of an aqueous solution containing propylene glycol and diclofenac sodium salt.

Diclofenac sodium salt is preferably present in the composition in quantities ranging from 25 to 75 mg per unit dose administered. Thiocolchicoside can be present in the composition in quantities ranging from 1 to 10 mg per unit dose administered. BHA can be present in the composition in quantities ranging from 0.1 to 1.2 mg per unit dose administered. The excipients mannitol or sorbitol can be present in the composition in quantities ranging from 6 to 32 mg per unit dose administered. Propylene glycol can be present in the composition in quantities ranging from 800 to 2000 mg per dosage unit. In a preferred embodiment of the invention the composition contains diclofenac sodium salt at the concentration of 18.75 mg/mL, corresponding to a dosage unit amount of 75 mg, and Thiocolchicoside at the concentration of I mg/mL, corresponding to a dosage unit amount of 4 mg.

A further aspect of the invention relates to the use of the composition according to the invention for the treatment of rheumatic or traumatic pain and inflammation of the joints, muscles, tendons and ligaments. The composition according to the invention can be administered in dosage unit amounts of 75 mg of diclofenac sodium and 4 mg of Thiocolchicoside once or twice a day.

4. A client meets you and provides technical information regarding his invention. Draft a complete specification with at least two claims and a title for anyone of the following descriptions, for filing in the Indian Patent office. While drafting the complete application, specify an appropriate title, abstract summarizing the invention, description explaining its details, claims defining its protectable aspects, drawings or figures or tables for visual representation.
Also write a justification for the drafted claims explaining how it protects the desired scope of the invention.

Problem Statement: Traditional automobile construction predominantly relies on steel, which poses limitations in achieving optimal strength-to-weight ratios, affecting fuel efficiency, performance, and safety. Addressing these constraints, enhancing sustainability in vehicle manufacturing remains a pressing challenge.

Challenges: Melding titanium wire and carbon fiber to create a cohesive, durable structure poses technical challenges in manufacturing and assembly processes. The cost of these advanced materials and the associated manufacturing techniques might hinder widespread adoption in mainstream vehicle production.

Solution Offered: The instant application utilizes titanium wire and carbon fiber reinforcements in car design and construction. By leveraging the exceptional properties of these materials, it creates a new paradigm in vehicle manufacturing, focusing on strength, lightweight construction, and improved safety.
Key Components: Renowned for its high strength-to-weight ratio and corrosion resistance, titanium wire would serve as the primary structural material.

Carbon Fiber Reinforcements: Adding stiffness and strength, carbon fiber complements titanium wire, enhancing the overall structural integrity of the vehicle.

Advanced Manufacturing Techniques: Utilization of innovative manufacturing methods such as additive manufacturing and composite molding to optimize the integration of these materials.
Impact and Benefits: Improved strength-to-weight ratio leads to enhanced performance, agility, and fuel efficiency.

Safety Advancements: Superior structural integrity and crash resistance contribute to heightened safety standards. Sustainability: Reduction in vehicle weight enhances fuel efficiency, thus reducing carbon emissions.

Technological Innovation: Pioneering the use of advanced materials sets a benchmark for future automotive design and manufacturing. This technology may find application in making automobile from bikes (cycle) to rocket construction creating safer, efficient, and sustainable vehicles.

DESIGN APPLICATION

1. Make a representation sheet for a design application on an automated device for spraying liquid sample. Here the design should be made taking into consideration that a presence of a tank containing the spray liquid, mounted on top of a platform. The “Spraying Robot” has also a base platform with wheels enabling movement across floors or ground areas. It has a nozzle located beneath the platform for directed dispensing. It has guiding rails and possible sensor mounts to ensure accurate navigation and obstacle avoidance. The design should be prepared in such a way that it can be used for agricultural spraying such as pesticides, herbicides, foliar feeds spraying and to sanitize large indoor areas such as hospitals, airports, factories. Please mention the probable name, class and sub-class of the design.

2. Make a representation sheet for a design application on an automated device for sorting blood samples in a pathology lab. This device will be used for automated sorting of fluid sample especially useful for Point of Care unit to keep a particular fluid sample in the tray connected to a particular patient. Here the arm is a robotic arm which will be feedback controlled. It can scan the bottle of the fluid to record the patient details. So, this device can (i) put a particular sample in a particular place of the tray, (ii) keep the details connected with the sample and its place, (iii) give back the sample if asked for further analysis. Please mention the probable name, class and sub-class of the design.

3. Make a representation sheet for a design application on a device having the feature of both of a spoon and a tweezer. The device should be designed for both scooping and gripping small items with precision. It is predicted to be used in culinary settings for plating delicate ingredients, in laboratories for handling small samples, and in beauty or craft applications where both control and scooping are needed. This hybrid device should offer the convenience of two functions in one, making it versatile and efficient for tasks requiring both dexterity and containment.

Please mention the probable name, class and sub-class of the design.

4. Make a representation sheet for a design application on a stool with the advantage of being adjustable in nature so that with a system of knob-Based Adjustment, desired height could be achieved. The proposed adjustable stool could be a versatile seating solution in laboratories, workshops, studios, and in home, where, the knob-Based Adjustment will allow the users to modify easily the stool's height to suit different tasks or comfort preferences. The proposed adjustable stool will promote ergonomic posture and reduce strain during prolonged use. The proposed design will be especially useful in those scenarios where multiple users with variable heights, postures, and preferences share the same seating place at different points of time. It will provide a quick, safer, comfortable, durable, comparatively cheaper solution with respect to the case of buying several stools of different non-adjustable heights, and also a secured solution for adjusting the height without tools, making it a practical choice for both professional and personal use.

Please mention the probable name, class and sub-class of the design.

RAS INTERNATIONAL
Your Trusted Partner in Intellectual Property

REFERENCES

1. THE PATENTS ACT, 1970
2. THE PATENTS RULE, 2003
3. MANUAL OF PATENT OFFICE PRACTICE AND PROCEDURE
4. THE DESIGNS ACT, 2000
5. THE DESIGNS RULE, 2001
6. MANUAL OF DESIGNS PRACTICE & PROCEDURE
7. OFFICIAL JOURNAL OF THE PATENT OFFICE

RAS INTELLECT
Your Trusted Partner in Intellectual Property

Notes

RAS INTELLECT

Your Trusted Partner in Intellectual Property